Experience

the Hi-Lite Advantage

16K ALUMINUM SHORING

Introduction 3

Why Aluminum ? 4

Safety Guidelines 5

Features & Benefits 8

Product Information-16KIP Product Line

- Frames 10
- Ledgers/Legs 11
- Assembly 12
- Extension Tubes 14
- Screw Jacks and Accessories 15
- Saddle Beam 16
- Beam Clips & T-Bolts 17
- Clamps 18
- Jet-Locks 19
- Cross Braces 20
- Beam 21

Lateral Bracing 22

Maintaining Full Leg Load 24

Inter-Frame Bracing 25

Units of Measure 30

Tower Capacities- 16K 31

Saddle Beam Capacities 32

Erecting Towers 33

Economical Setup Procedures 34

Set Up Examples 35

Extension Tubes 39

Safety Guidelines/Fall Prevention 40

Parts List A1

This information is subject to change. Latest information may be obtained from JASCO's web site at www.hi-lite-systems.com. Copyright © 2008 by JASCO Sales Inc. All rights reserved. No part of this manual may be used or reproduced in any manner whatsoever without prior written permission.

INTRODUCTION

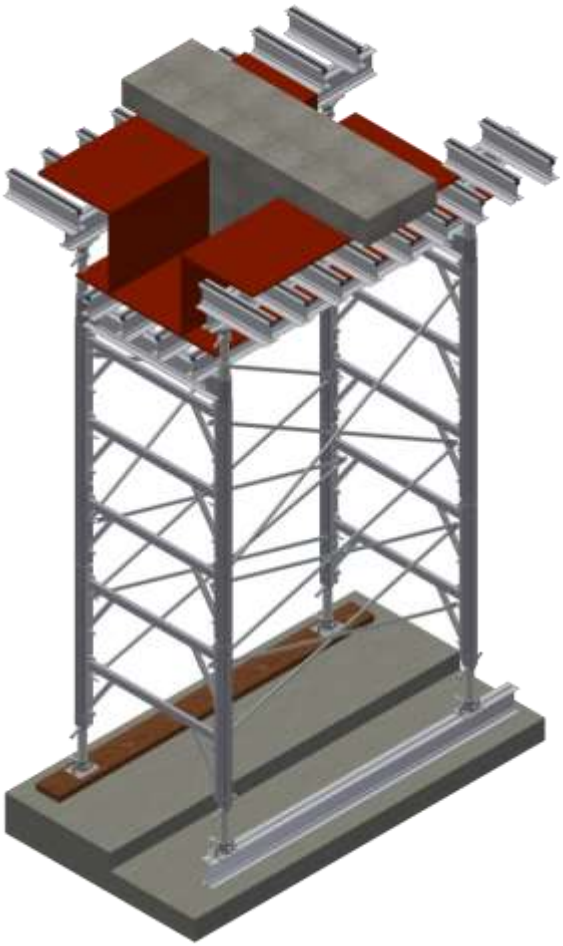

The 16K Shoring System is primarily a hand-set system. It can also be handled with a crane, and may also be used quite successfully as a rolling or a flying system. (Consult with Hi-Lite Engineering for design)

This manual is published primarily for our customers, shoring designers and erectors this aluminum shoring system. It is intended *only as a guide* and should be used in conjunction with "generally accepted shoring design and safety regulations" in effect within the area and country of use.

The purpose of this manual is to simplify the understanding and use of the System. In this manual, each component of the 16K Shoring Systems is fully described and illustrated. The features and benefits of using the Hi-Lite 16K Shoring system are outlined in depth and key elements are cross referenced to particular components.

The Manual covers various setup arrangements of the equipment; the correct use of the system including handling and maintenance of the equipment.

Local authorities and/or a locally registered Professional Engineer should approve all drawing for construction purposes.

Barry & Dave Jackson

JASCO SALES INC. / HI-LITE SYSTEMS

This information is subject to change. Latest information may be obtained from JASCO's web site at www.hi-lite-systems.com. Copyright © 2008 by JASCO Sales Inc. All rights reserved. No part of this manual may be used or reproduced in any manner whatsoever without prior written permission.

RECYCLABLE, SUSTAINABLE, VERSATILE:

- What exactly does it mean to be green? For a material or product to be considered green, it should have low impact on the environment and therefore favor environmentalism—the practice of protecting and conserving the natural environment and its resources. Aluminum is one such material.

- What makes aluminum a green material? Aluminum is recyclable, sustainable, and versatile; three key qualities for any material being used to construct a green building. Historically, aluminum has proven to be one of the most important materials in successful recycling programs. Aluminum offers high scrap value, widespread consumer acceptance, and aluminum recycling enjoys significant industry support.

- Using recycled building materials saves substantial total energy otherwise used for material production. Producing recycled aluminum building materials reduces pollution emissions and energy use, taking only five percent of the energy needed to produce raw aluminum from bauxite. Jerry Powell, Editor, Resource Recycling says, "Many construction materials are hard, if not impossible, to recycle, and this is a negative factor when wishing to undertake a sustainable construction project. This is not the case, however, for aluminum as a building product. The sizable energy savings attained when scrap aluminum is re-melted makes the recovered metal very valuable."

- Aluminum, one of the most abundant elements in the earth's crust, is an ideal natural materials choice for sustainable construction products.

- From a green design perspective, aluminum's reduced cost over a longer life cycle offers builders a viable economical choice. Aluminum resists the ravages of time, temperature, corrosion, humidity, and warping, adding to its incredibly long life cycle.

This information is subject to change. Latest information may be obtained from JASCO's web site at www.hi-lite-systems.com. Copyright © 2008 by JASCO Sales Inc. All rights reserved. No part of this manual may be used or reproduced in any manner whatsoever without prior written permission.

SAFETY FACTORS

OUR EQUIPMENT ARE CONSTANTLY TESTED TO ASSURE THE USER A HIGH STANDARD OF QUALITY. SAMPLES ARE TESTED IN HI-LITE TEST FACILITIES. THE SAFE WORKING LOADS LISTED IN THIS MANUAL WERE DETERMINED FROM THE RESULTS OF TESTING PROGRAM. THE SAFETY FACTOR APPLIED TO THE PRODUCT IS DEPENDENT ON THE DEGREE OF HAZARD OR RISK INVOLVED IN THE APPLICATION OF THE EQUIPMENT AND JOB SITE CONDITIONS, WHICH CAN OFTEN INCREASE THE DEGREE OF RISK.

CONCENTRATED LOADS, SUCH AS CONSTRUCTION MATERIALS STACKED ON THE FORMWORK, NON-SYMMETRICAL PLACEMENT OF CONCRETE, UPLIFT, IMPACT OF MACHINE DELIVERED CONCRETE, USE OF MOTORRIZED CARTS AND EXTRIME FORMWORK HEIGHT, ARE EXAMPLES THAT PRODUCE HIGH RISK FACTOR.

PLEASE CONSULT ENGINEERING DEPARTMENT OF HI-LITE-SYSTEMS IF YOU HAVE ANY OF THE ABOVE

HI-LITE TECHNICAL ASSISTANCE

IN THE SITUATONS WHERE A CONTRACTOR DOES NOT HAVE A QUALIFIED PERSON ON STAFF, HI-LITE TECHNICAL ASSISTANCE PERSONNEL ARE TRAINED TO PROVIDE SUCH SERVICES.

WARNING

IMPROPER USE OF HI-LITE 16K FRAMES SHORING SYSTEMS MAY COUSE PROPERTY DAMAGE. SERIOUS INJURY OR DEATH.

THE USER MUST FOLLOW THE INSTRACTIONS AND REGULATIONS OF HI-LITE SYSTEM ENGINEERING DEPARTMENT

WHEN IN DOUBT ABOUT PROPER USE OR INSTALLATION, IMMEDIATELY CONTACT HI-LITE SYSTEMS ENGINEERING OR TECHNICAL PERSONNEL FOR CLARIFICATION.

This information is subject to change. Latest information may be obtained from HI-LITE's web site at www.hi-lite-systems.com. Copyright © 2013 by HI-LITE SYSTEMS Inc. All rights reserved. No part of this manual may be used or reproduced in any manner whatsoever without prior written permission.

SAFETY COMES FIRST
SAFETY IS EVERYONE'S RESPONSIBILITY

CONSTRUCTION PROJECTS SHOULD BE SAFE WORKPLACE. WORKERS, SUPERVISORS AND EMPLOYERS ARE ALL RESPONSIBLE FOR SAFETY.

OUR COMMITMENT TO A SAFE WORK ENVIRONMENT IS THE PRIORITY OF OUR OPERATING SYSTEM AND OUR SAFETY POLICY, EQUIPMENT SYSTEMS AND DESIGNED TO ENGAGE OUR ENTIRE WORKFORCE IN DELIVERY OF SAFE WORK ON ALL OUR AND OUR PARTNERS / CUSTOMERS PROJECTS.

ON SITE SAFTY DEPENDS UPON THE PROPER ERECTION AND SAFE USE OF SHORING AND FORMING EQUIPMENT.

HI-LITE PRODUCTS ARE DESIGNED TO HELP CONTRACTORS TO INCREASE SAFETY, PRODUCTIVITY AND EFFICIENCY.

ALL OF OUR EQUIPMENT DESIGNED ACCORDING TO NORTH AMERICAN AND INTERNATIONAL STANDARDS.

ALL THE SYSTEMS DESIGN WITH SAFETY FACTOR 2.5:1 FOR THE SHORING AND FORMING AND 4:1 FOR SCAFFOLDING.

HI LITE'S DOCUMENTATION IS CONVENIENT, EASY TO READ AND EASY TO USE. WE WILL SHOW YOU THE RIGHT WAY TO USE AND OPERATE OUR SYSTEMS. IT WILL TELL YOU ALL YOU NEED TO KNOW FOR SAFE AND EFFECTIVE WORK ON JOBSITE.

This information is subject to change. Latest information may be obtained from HI-LITE's web site at www.hi-lite-systems.com. Copyright © 2013 by HI-LITE SYSTEMS Inc. All rights reserved. No part of this manual may be used or reproduced in any manner whatsoever without prior written permission.

- INSPECT ALL THE EQUIPMENT BEFORE USING.
- ALL SHORING LAYOUTS SHOULD BE AVAILABLE AND USED ON CONSTRUCTION SITE ALL THE TIME
- FOLLOW ALL THE INSTRUCTION AND INSPECT ALL SHORING AND FORMING EQUIPMENT FOR CONFORMITY WITH LAYOUT AND SAFETY PRACTICE BEFORE POUR, DURING AND AFTER POUR UNTIL CONCRETE IS SET.
- CONSUILT HI-LITE SYSTEMS IF YOU HAVE ANY QUESTIONS.

HI-LITE INSTRUCTIONS FOR ASSEMBLY AND USE SHOW YOU, IN DETAILS, THE RIGHT WAY TO SET UP AND USE THE FORMWORK AND SHORING SYSTEMS. THIS INFORMATION IS AN IMPORTANT TOOL TO HELP YOU WORK WITH THE HI-LITE EQUIPMENT CORRECTLY.

UNDERSTANDING AND FOLLOWING THESE SAFETY GUIDELINES WILL IMPROVE SAFETY FOR AMM WORKERS ON THE CONSTRUCTION SITE. IF THERE ARE ANY QUESTIONS , OR IF YOU NEED ASSISTANCE IN OBTAINING ADDITIONAL TRANING FOR YOUR EMPLOYEES, PLEASE CONTACT HI-LITE.

ASSEMBLY SAFETY RECOMMENDATIONS

ALL THE ERECTION CREW MUST BE EQUIPPED WITH HARNESSES AND DOUBLE LANYARDS.

THE FOUNDATION MUST HAVE SUFFICIENT STRENGTH TO SAFELY SUPPORT THE ERECTED SHORING TOWERS.

SLOPPED SURFACES MUST BE COMPENSATED FOR BY LEVELING THE AREA BELOW THE BASEPLATES OR BY PROVIDING WEDGES SECURELY ATTACHED TO SILLS. SILLS SHOLD BE 2 in x 10in (50mm x 250mm) WOOD PLANKS OF SUITABBLE LENGTH.

This information is subject to change. Latest information may be obtained from HI-LITE's web site at www.hi-lite-systems.com. Copyright © 2013 by HI-LITE SYSTEMS Inc. All rights reserved. No part of this manual may be used or reproduced in any manner whatsoever without prior written permission.

FEATURES & BENIFITS

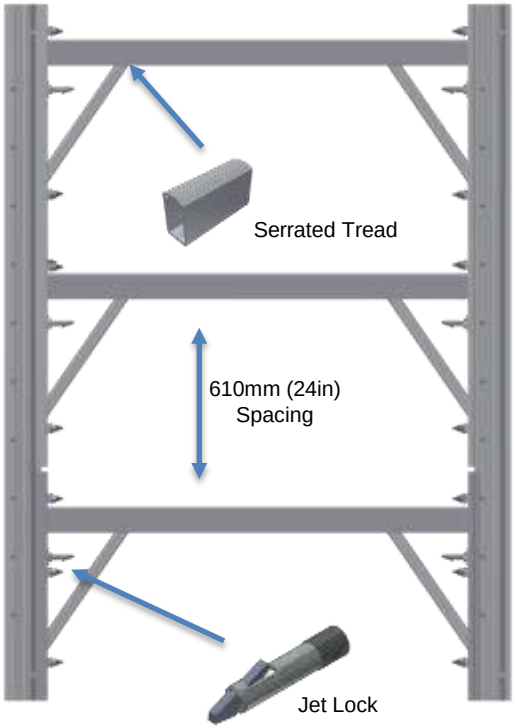

Hi-Lite Systems is the original manufacturer of the worlds very first aluminum shoring frames. As both the designer and the manufacturer of the system, we are naturally the best choice when it comes to supporting our customers, in all cases of design, layout and application of the product.

- Hi-Lite's ***16K Aluminum Shoring*** frames weigh less than half that of comparable capacity steel frames and they can be handled by a single worker.
  - A 6ft high, 4ft wide 16K frame weighs 25.5 kg (56.2 lbs) compared with the same size steel frames weighing over 50 kg (110 lbs.).
- Our ***16K Aluminum Shoring*** frames also incorporate many special labor-saving design features:
  - The top edge of the horizontal bar is serrated to resist slippage.
  - The Jet Lock (a design first) has proven itself over the years to be the fastest and most advanced lock on the market.
  - Hi-Lite's ***16K Aluminum Shoring*** is designed to accommodate various floor heights using only a single tier of frames, by utilizing specially designed extension tubes that also accept the Hi-Lite's aluminum *and steel* screw jacks.
  - Using extension tubes can reduce the number of frames required by as much as 50%.
- Safety of your trade people, and improved productivity.

This information is subject to change. Latest information may be obtained from JASCO's web site at www.hi-lite-systems.com. Copyright © 2008 by JASCO Sales Inc. All rights reserved. No part of this manual may be used or reproduced in any manner whatsoever without prior written permission.

FEATURES & BENIFITS

Our ***16K Aluminum Shoring*** frames also incorporate many special labor-saving design features:

- The de-mountable horizontal members are rectangular, to give the highest strength for the lowest weight.
- Hi-Lite's ***16K Shoring System*** is de-mountable for changing the width of the frames, leg size and capacity (16K) or to allow the legs to be used as Post Shores, using standard Screw Jacks and Extension Tubes.
- Continuous T-bolt slots on the legs allow for attachments to the legs at any location for additional bracing, lacing and/or many other optional accessories.
- The corner gusset bracing is designed to serve not only as a stiffening member, but also to protect the Jet Locks (the Cross Brace locking devices). These corner braces strengthen the frame without obstructing the function of the locks.

Note: Using extension tubes reduces the capacity of the frame. Please consult our engineering department for load capacities.

This information is subject to change. Latest information may be obtained from JASCO's web site at www.hi-lite-systems.com. Copyright © 2008 by JASCO Sales Inc. All rights reserved. No part of this manual may be used or reproduced in any manner whatsoever without prior written permission.

Hi-Lite's ***16K Aluminum Shoring*** frames are made of a special high-strength aluminum alloy. Their **Hi**-strength / **Lite**-weight ratio greatly facilitates handling and erecting. The horizontal (serrated) ledgers make climbing safer and help to secure wood planks. Jet Locks are spaced at 605mm (2ft) centers to enable frames to be inter-braced with standard Cross Braces when erected more than one tier high. Hi-Lite's 16K Shoring System is built to safely support loads of up to 14,500kg (32,000lb) with *a Factor of Safety* of 2.5:1.

Frame capacities vary, depending the number of tiers in height, the lengths of extensions, amount of bracing, whether inter-bracing has been used, and if there are any lateral or wind loads imposed.

Note: Using extension tubes reduces the capacity of the frame. Please consult our engineering department for load capacities.

The normal testing configuration of the ***16K Shoring System*** exceeds the requirements of both the CSA and the SSFI of the USA A tower, 3 tiers high, consisting of 6ft high frames, with Screw Jacks extended 16", top and bottom, is loaded to failure. The load rating of the frames is then determined by dividing the failure load by the required Safety Factor. Holes in the frame legs, spaced at 150mm (6in) intervals, enable coarse adjustment of Extension Tubes at the top and/or bottom of the frames, to increase the overall height of the frame legs, to cope with steps or severe slopes, until a further combination of frames will make up the desired height.

This information is subject to change. Latest information may be obtained from JASCO's web site at www.hi-lite-systems.com. Copyright © 2008 by JASCO Sales Inc. All rights reserved. No part of this manual may be used or reproduced in any manner whatsoever without prior written permission.

LEDGERS / LEGS

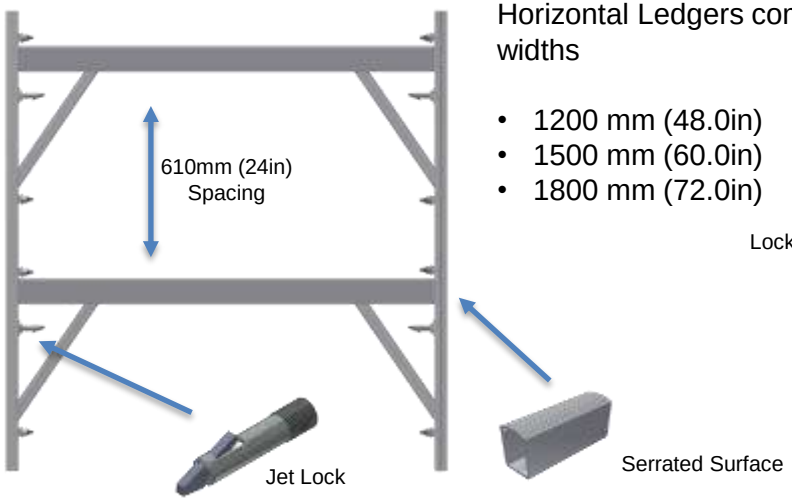

Horizontal Ledgers come in three standard widths

- 1200 mm (48.0in)
- 1500 mm (60.0in)
- 1800 mm (72.0in)

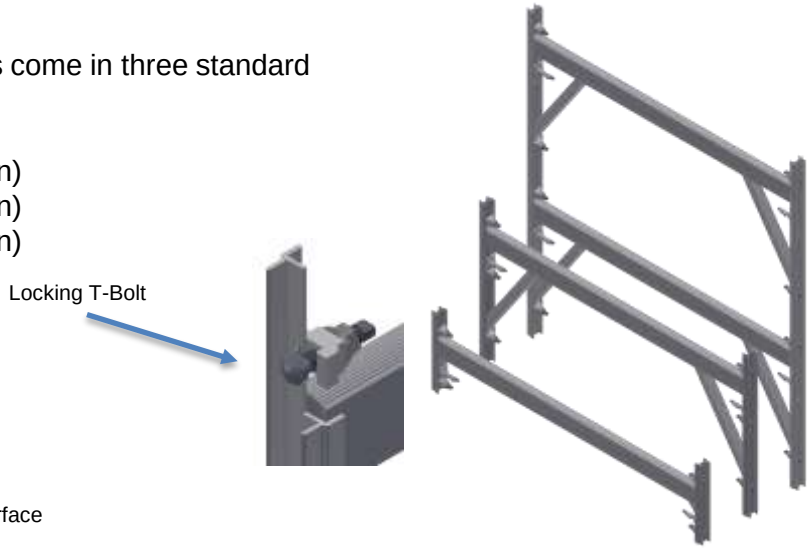

Hi-Lite's 16K Aluminum Shoring frame legs are made from Hi-Strength Aluminum alloy: With features such as:

- Continuous T-bolt slots on the legs allow for attachments to the legs at any location for additional bracing, lacing and/or many other optional accessories,
- Extension Tube placement holes spaced at 6inches,
- Hi-Strength Lite-Weight aluminum Alloy

This information is subject to change. Latest information may be obtained from JASCO's web site at www.hi-lite-systems.com. Copyright © 2008 by JASCO Sales Inc. All rights reserved. No part of this manual may be used or reproduced in any manner whatsoever without prior written permission.

1. Set up a level work area to assemble the frame legs and ledgers.

2. Set one leg on the work area, making sure that the holes in the leg are facing the correct way

Note hole orientation in frame leg.

3. Align the ledger assembly with the top of the frame leg.

4. Make sure the ledger is flush at the top.

Note: On all frames requiring one ledger the ledger is always flush with the top of the frame leg.

On Frames requiring two ledgers, one ledger is flush with the top and the second ledger is flush with the bottom of the frame leg.

This information is subject to change. Latest information may be obtained from JASCO's web site at www.hi-lite-systems.com. Copyright © 2008 by JASCO Sales Inc. All rights reserved. No part of this manual may be used or reproduced in any manner whatsoever without prior written permission.

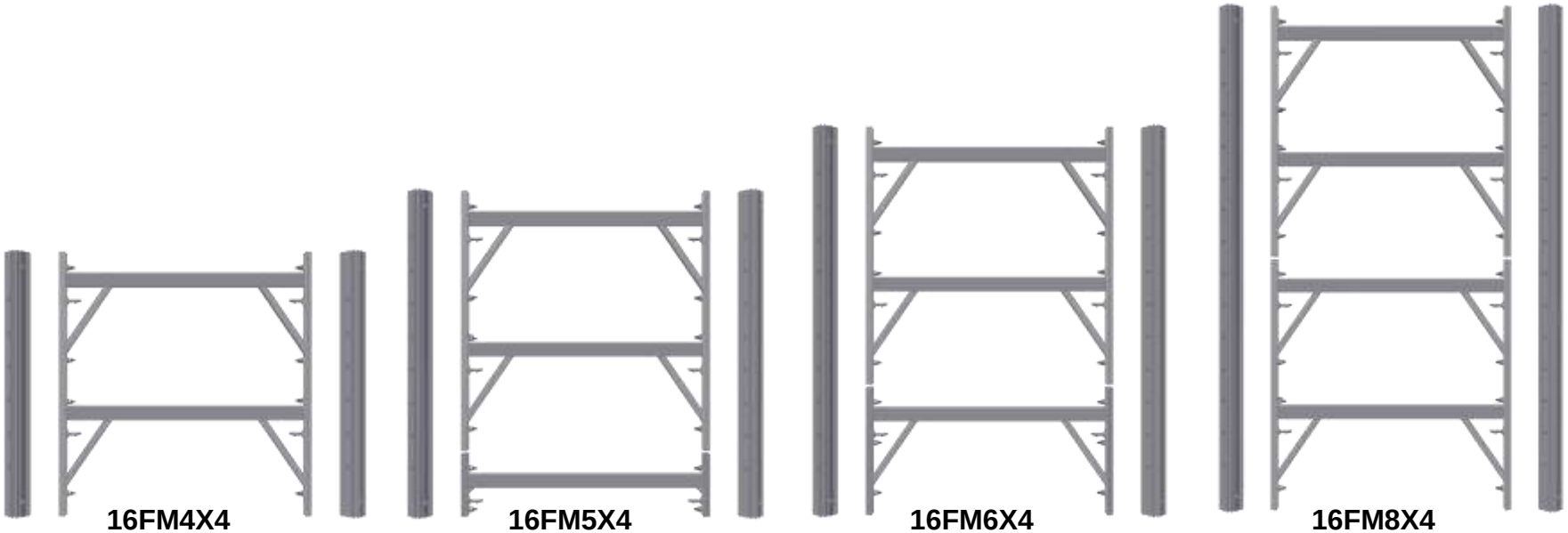

16FM4X4
2 – 16LG4
1 – ML47X4

16FM5X4
2 – 16LG5
1 – ML47X4
1 – ML11X4

16FM6X4
2 – 16LG6
1 – ML47X4
1 – ML23X4

16FM8X4
2 – 16LG8
2 – ML47X4

This information is subject to change. Latest information may be obtained from JASCO's web site at www.hi-lite-systems.com. Copyright © 2008 by JASCO Sales Inc. All rights reserved. No part of this manual may be used or reproduced in any manner whatsoever without prior written permission.

EXTENSION TUBES

Extension Tubes readily slide into the frame legs to give additional height to the frames in 150mm (6in) increments. Screw Jacks can be inserted into the Extension Tube to provide fine adjustment. Base plates can be connected to the Extension Tubes when fine adjustment is not required. Extension Tubes for Frames are available in 900mm (36in) , 1.2m (48in), 1.5m (60in) & 1.8m (72in) lengths for maximum extensions of 500mm (21in), 840mm (33in), 1143mm (45in), 1448mm (57in) & respectively.

There are two holes and a half hole in each Extension Tube. The hole and the half hole are spaced 150mm (6in) apart to match with the holes in the frame leg, for securing the Extension Tube into the frame leg. The half hole ensures correct alignment of the Extension Tube in the frame leg. One pin of the Extension Tube Support Pin set is installed completely into the frame leg, at the required level of the bottom of the Extension Tube. The Extension Tube is placed into the leg until it rests on the pin. Then the tube is rotated until the half hole slips down onto the pin. This automatically aligns the Extension Tube in the frame leg so that the second hole lines up, and the second pin can be installed without looking or "fishing".

The single hole at the other end of the tube is intended to be used for attaching the base plates to the Extension Tube, using the connector pin.

Extension Tubes are recommended for the following purposes:

a.) To extend the height of one or both legs of the frames.
b.) When coarse or rapid adjustment is required.
c.) To adjust for sloping slabs and/or grades or steps.
d.) To allow for lowering when frames need to be lowered a large amount to clear spandrel beams, etc

This information is subject to change. Latest information may be obtained from JASCO's web site at www.hi-lite-systems.com. Copyright © 2008 by JASCO Sales Inc. All rights reserved. No part of this manual may be used or reproduced in any manner whatsoever without prior written permission.

SCREW JACKS

Hi-Lite's uses two styles of *Screw Jacks with* the 16Kip shoring systems (Same as the 12K System). The 48mm (1.9in) & the Dywidag Screw Jack.

Our 48mm (1.9in) hollow steel shaft, 813mm (32in) long with 610mm (24in) of adjustment.

All Hi-Lite *Screw Jack* plates can accommodate T-Head bolts, designed for quick and easy locking into the continuous slot on our aluminum stringer beams. When the plate is to rest on mudsills or to be used with timber stringer material, instead of aluminum, it can be secured to the timber by nailing through the holes provided in the plate or a special U-Head can be attached to the Jack Plate.

The adjusting nut handles are "stepped" to allow the Screw Jack to be solidly centered in either an Extension Tube or the frame leg, thus assuring straight alignment and rigidity.

The Dywidag Screw jacks are 605mm (24in) long, with 430mm (17in) of adjustment. It is available in two forms (fixed and swivel base); both styles utilize the nearly indestructible nature of the Dwidag rod whose thread will not get damaged and is also self-cleaning.

The Standard *Fixed Plate Screw Jacks*, is recommended to be used for Post Shores and on level floors or slabs.

The *Swivel Plate Screw Jack* serves for uneven or sloped base conditions, or where it is required for forming inclined surfaces. Used on top or at the bottom, the plates are equipped with 2 T-bolts for positively locking to stringer beams.

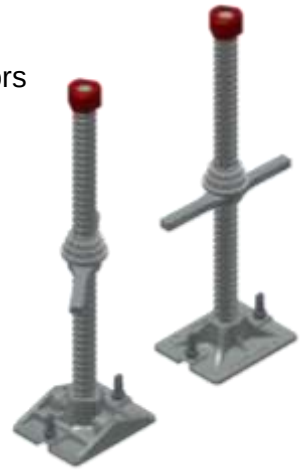

Note: Stabilizer caps are used to remove "wobble" in jack shafts when inserted in frames legs or extension tubes, ensuring better load capacities and safety.

Hint to save time always set the adjusting nut higher than finish height before installing it in the frame leg or Extension Tube. It is always easier to lower than to raise for final setting

This information is subject to change. Latest information may be obtained from JASCO's web site at www.hi-lite-systems.com. Copyright © 2008 by JASCO Sales Inc. All rights reserved. No part of this manual may be used or reproduced in any manner whatsoever without prior written permission.

SADDLE BEAMS

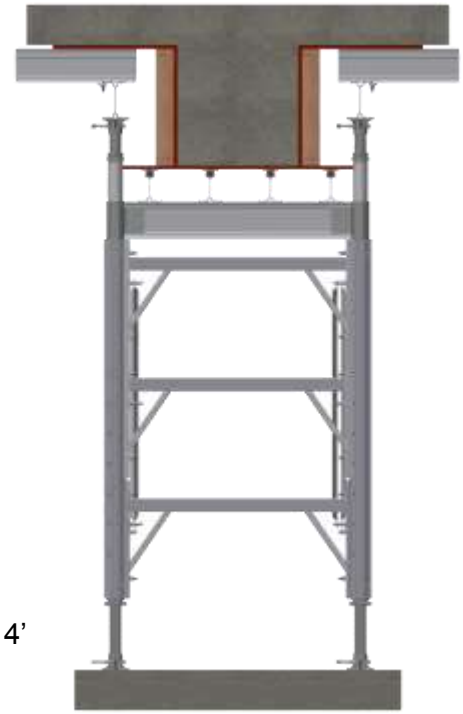

Hi-Lite's Saddle Beams make drop beam or pre-cast beams easy to deal with, enabling stripping the slab without loosening or disturbing the support under the concrete drop beams. The Saddle Beam facilitates supporting poured-in-place concrete drop beams within the frame, at one level, leaving the legs free to accommodate Extension Tubes and Screw Jacks to support the slab formwork, at another level. It also allows for easy stripping of the slab form without disturbing the concrete drop beam soffit forms.

Saddle Beams are made from lengths of standard 165mm (6-1/2in), high-strength Aluminum Beams, with special brackets at each end to enable them to transfer the load of concrete drop beams to the frame legs.

The Saddle Beam is installed at the top of a tower with Extension Tubes locked into the frame legs and protruding through the Saddle Beam end brackets. If wide poured-in-place concrete beams need to be supported, longer Saddle Beams can be adapted between two frames over the Cross Braces.

SH165SB4
16K Saddle Beam 6.5" – 4'
8.0 kgs / 17.6 lbs

SH165SB5
16K Saddle Beam 6.5" – 5'
9.6 kgs / 21.2 lbs

SH165SB6
16K Saddle Beam 6.5" – 6'
11.2 kgs / 24.8 lbs

REFER TO THE LOAD CHARTS FOR DETERMINING THE CAPACITIES OF THE VARIOUS CONFIGURATIONS OF SADDLE BEAMS.

This information is subject to change. Latest information may be obtained from JASCO's web site at www.hi-lite-systems.com. Copyright © 2008 by JASCO Sales Inc. All rights reserved. No part of this manual may be used or reproduced in any manner whatsoever without prior written permission.

T-BOLTS & BEAM CLIPS

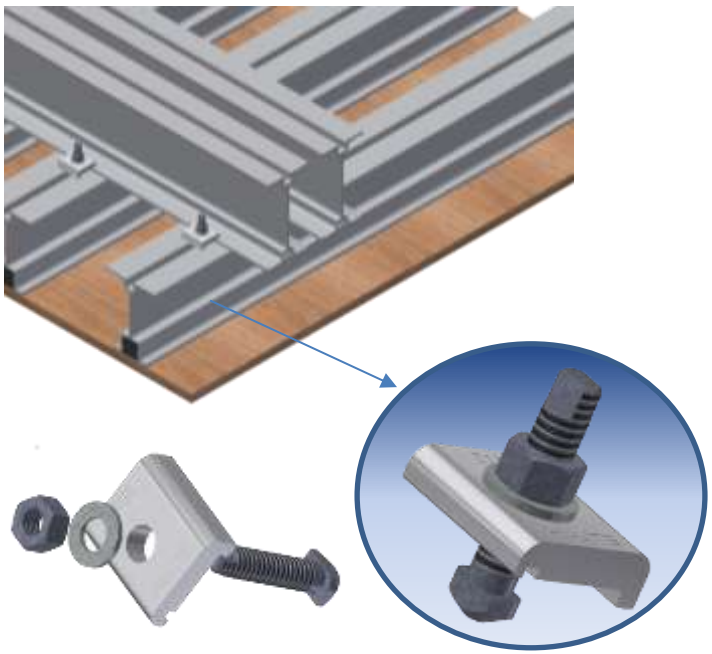

Note: The sharp corners very effectively secure one beam to another, preventing all movement. Beam Clips will secure any beam that has a 12.7mm (1/2in) T-bolt slot.

The T-bolt is forged from steel to provide for its special head, which guides the T-bolt into the beam slot. It is 12mm (1/2in) diameter by 45mm (1-3/4in) long, giving enough length to accommodate most uses. The thread is a special coarse Acme thread designed to eliminate seizing up as normal standard threads do.

The nut is loosely fitted on the bolt to provide for easy turning of the nut and still provide full strength of the bolt.

The Beam Clip plate is made from specially-formed high-strength aluminum

When the Beam Clip is assembled with T-bolt and hex nut as an assembly the bolt is crimped to prevent loss of the nut. The assembly s used to tie aluminum beams securely together.

Some other uses of the Beam Clip are:

a) Securing aluminum beams to standard steel Post Shores.
b) Securing joists to stringers on Wall Forms or rolling tables, or when a sloping slab is to be poured.

This information is subject to change. Latest information may be obtained from JASCO's web site at www.hi-lite-systems.com. Copyright © 2008 by JASCO Sales Inc. All rights reserved. No part of this manual may be used or reproduced in any manner whatsoever without prior written permission.

Wedge clamps are used to secure various OD tubing or pipe to each other, to frame legs or Extension Tubes for auxiliary bracing of towers. They are much faster and more convenient to use than conventional bolt clamps. Wedge clamps can be either fixed or swivel type. The fixed wedge clamp secures tubes at right angles to each other. Swivel wedge clamps allow connection of tubes at any angle.

Tube-and-clamp bracing is added to maintain capacity when building a support system of frame towers over 3 tiers high, to give extra stability. The clamps are adequately tightened with moderate blows from a carpenter's hammer.

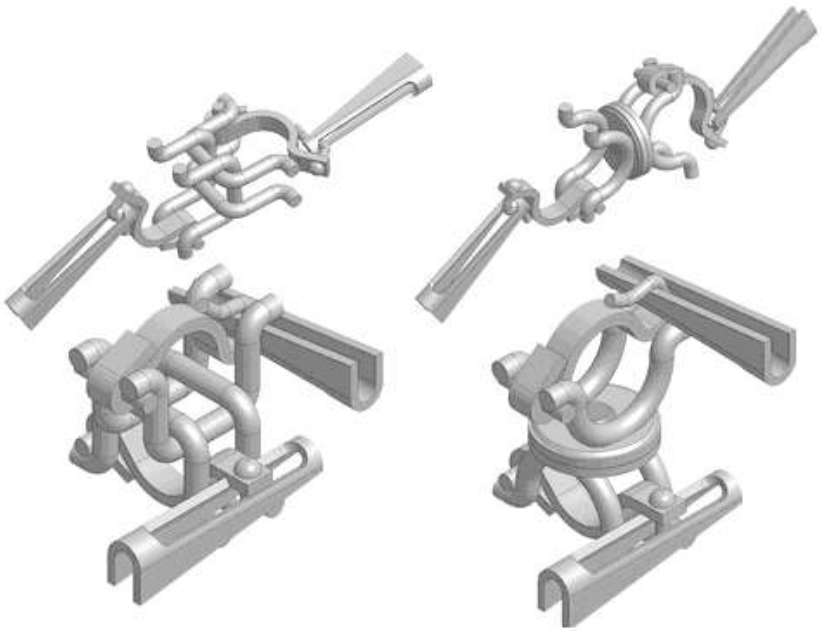

This information is subject to change. Latest information may be obtained from JASCO's web site at www.hi-lite-systems.com. Copyright © 2008 by JASCO Sales Inc. All rights reserved. No part of this manual may be used or reproduced in any manner whatsoever without prior written permission.

Jet Lock Spacing

The spacing of the Jet Locks permits inter-frame bracing, using standard size Cross Braces. This additional brace can add considerable rigidity to a multi-tier tower. The inter-frame brace is often a standard 600mm (2ft) Cross Brace by the length required. Jet Locks can also be spaced on 1.2m (4ft) modules on higher frames, allowing continuous 1.2m (4ft) by any length Cross Brace can also be used continually on a high tower, also giving full capacity when continuously braced.

Jet Lock Assembly

This unique fastener is standard on all Hi-Lite scaffolding and shoring frames. The Jet Lock is installed at appropriate locations to allow Cross Braces to be attached to the frames quickly and securely. Jet Locks are easily replaced in the field (if necessary) as they are held in place by standard hex jam nuts.

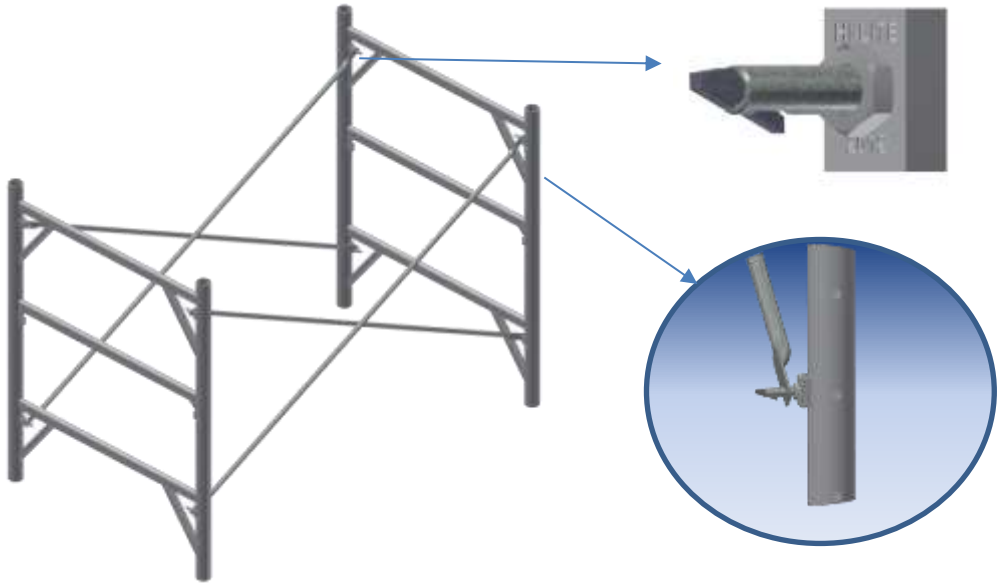

To install Cross Braces on the Jet Locks, simply open up the braces to position their holes over the Jet Locks, then push to snap on. The Jet Lock spring is made of stainless steel, for long, rust-free life. Jet Locks can be replaced with special bolts and nuts, if required, for positive solid connections of the Cross Braces to the frames. These special bolts are available, but they are seldom used, because the connection using the Jet Lock is very secure.

NOTE: On two-tier towers, when the first tier consists of 1.2m (4ft) high frames, the spring action of the Jet Lock enables the Cross Braces to be snapped onto the second tier of frames, from the ground, saving placement of planks and the climb to assemble. So, when a 1.2m (4ft) high frame is used together with a 1.8m (6ft) high frame, we recommend the 1.2m(4ft) frame be located at the bottom and the 1.8m (6ft) high frame on top with Screw Jacks in before placement.

This information is subject to change. Latest information may be obtained from JASCO's web site at www.hi-lite-systems.com. Copyright © 2008 by JASCO Sales Inc. All rights reserved. No part of this manual may be used or reproduced in any manner whatsoever without prior written permission.

CROSS BRACING

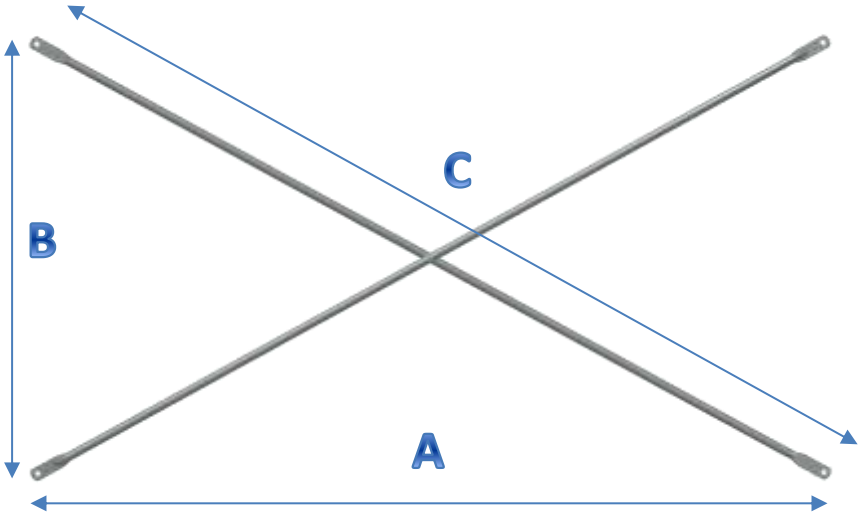

- 9/16” (14.3MM) HOLE
- SIZES ARE STAMPED ON ENDS
- HI TENSILE PRE GALVANIZED TUBES FOR LONG LIFE AND DURABILITY

PART No.	DESCRIPTION	TUBE		IMPERIAL				METRIC				COLOUR CODE	
	(A) x (B)	DIA. Inches/mm		A Feet	B Feet	C Inches	WEIGHT Lbs	A mm	B mm	C mm	WEIGHT Kg	HI-LITE	USER
CB42	4’ x 2’	1	25	4	2	53 5/8	6.0	1620	610	1361	2.72	**Orange**	
CB44	4’ x 4’	1	25	4	4	67 13/16	7.5	1620	1620	1722	3.40	**Yellow**	
CB52	5’ x 2’	1	25	5	2	64 9/16	7.2	1524	610	1641	3.27	**White**	
CB54	5’ x 4’	1	25	5	4	76 13/16	8.5	1524	1620	1951	3.86	**Silver**	
CB62	6’ x 2’	1	25	6	2	75 7/8	8.4	1828	610	1928	3.81	**Black**	
CB64	6’ x 4’	1	25	6	4	86 1/2	9.5	1828	1620	2197	4.31	**Red**	
CB72	7’ x 2’	1	25	7	2	87 5/16	9.6	2134	610	2218	4.35	**Blue**	
CB74	7’ x 4’	1	25	7	4	96 3/4	10.6	2134	1620	2456	4.81	**Grey**	
CB82	8’ x 2’	1	25	8	2	98 15/16	10.9	2438	610	2516	4.94	**Green**	
CB84	8’ x 4’	1	25	8	4	107 5/16	11.8	2438	1620	2725	5.35	**Orange**	
CB102	10’ x 2’	1	25	10	2	162 3/8	13.4	3048	610	3109	6.08	**Yellow**	
CB104	10’ x 4’	1	25	10	4	169 1/4	14.1	3048	1620	3282	6.40	**Grey**	

This information is subject to change. Latest information may be obtained from JASCO’s web site at www.hi-lite-systems.com. Copyright © 2008 by JASCO Sales Inc. All rights reserved. No part of this manual may be used or reproduced in any manner whatsoever without prior written permission.

ALUMINUM BEAMS

MORE VERSATILE: Plastic or wood insert allows for nailing or screwing down plywood decking. Less subject to damage than wooden beams. Reusable. It all adds up to less inventory, less storage, lower transportation cost, and lower carrying costs.

MORE ECONOMICAL: 12.7mm (½") T-bolt slots provide for easy fastening of beams and stringers to their supports or to each other. Your workers will be more productive and the lower labour costs will be reflected in your bottom line.

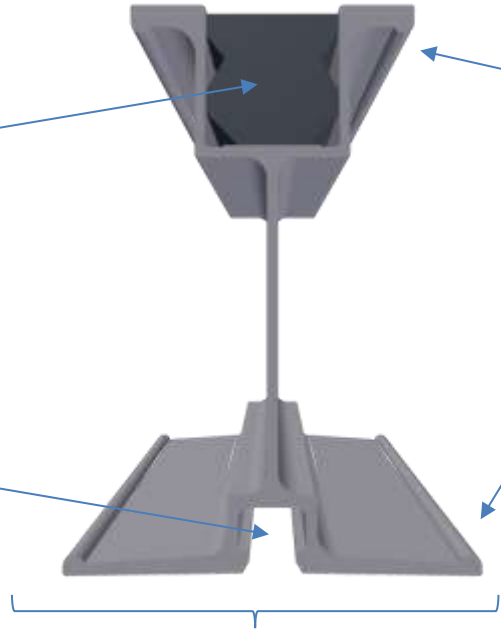

STRONGER: Reinforced side flanges resist bending and retain beam clips. Employees spend less time repairing and more time working.

SAFER: Wider flanges resist overturning. Fewer accidents and injuries mean less employee downtime and lower insurance costs.

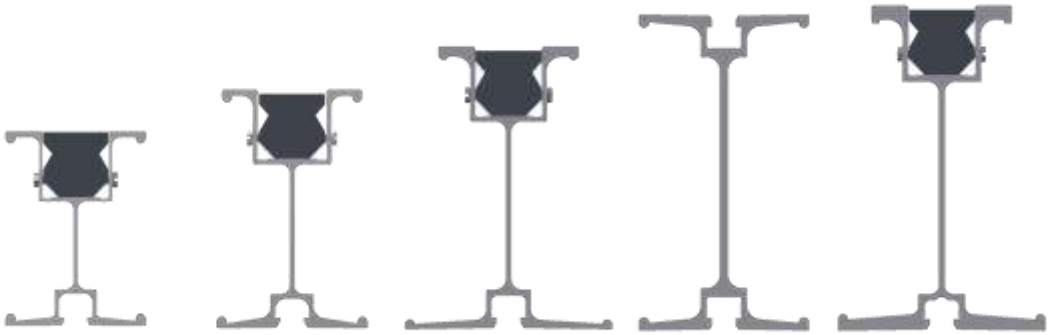

Hi-Lite Aluminum Beams have many other advantages over competing beams. Our designs save time on the job and reduce maintenance. Please refer to our load charts for capacities. Generally speaking, Hi-Lite beams carry more load and usually cost less.

This information is subject to change. Latest information may be obtained from JASCO's web site at www.hi-lite-systems.com. Copyright © 2008 by JASCO Sales Inc. All rights reserved. No part of this manual may be used or reproduced in any manner whatsoever without prior written permission.

LATERAL BRACING

GENERAL RECOMMENDATIONS

- Lateral bracing shall be designed by a qualified structural engineer in accordance with National Building Codes and Local regulations.
- Towers exceeding the allowable height-to-base ratio shall be braced in both directions.
- Clamping of external bracing shall be at the intersection of vertical legs with the bracing tube.
- Do not connect bracing tubes to the frame's ledgers.
- Whenever possible, the horizontal bracing shall be tied to permanent structures such as walls, columns.
- If no walls or columns are present, guying can be used as an alternative.

IMPORTANT:

The temporary shoring structures shall be structurally analyzed to include all lateral loads including wind pressure, lateral loads due to motorized equipment, lateral load components due to inclined supports or live and dead loads, etc

If required, consult Hi-Lite Systems Engineering Department.

As a Guideline: In Canada, horizontal bracing is placed at a height not exceeding 3 times the minimum base width. In the USA, except for some states, the rule is 4 times the minimum base width.

BE SURE TO CHECK ALL RELEVANT CODES.

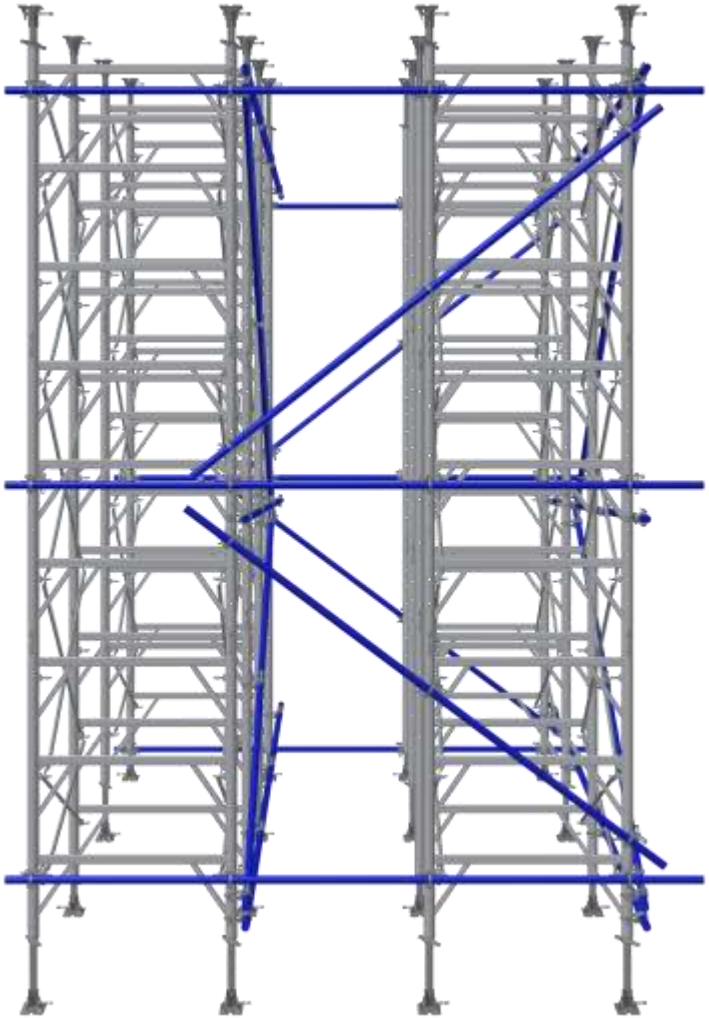

This information is subject to change. Latest information may be obtained from JASCO's web site at www.hi-lite-systems.com. Copyright © 2008 by JASCO Sales Inc. All rights reserved. No part of this manual may be used or reproduced in any manner whatsoever without prior written permission.

LATERAL BRACING

SLOPPING SURFACES

- Lateral bracing shall be designed by a qualified structural engineer in accordance with National Building Codes and Local regulations.
- Towers exceeding the allowable height-to-base ratio shall be braced in both directions.
- Clamping of external bracing shall be at the intersection of vertical legs with the bracing tube.
- Do not connect bracing tubes to the frame's ledgers.
- Whenever possible, the horizontal bracing shall be tied to permanent structures such as walls, columns.
- If no walls or columns are present, guying can be used as an alternative.

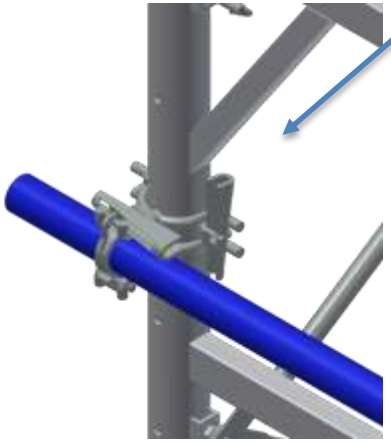

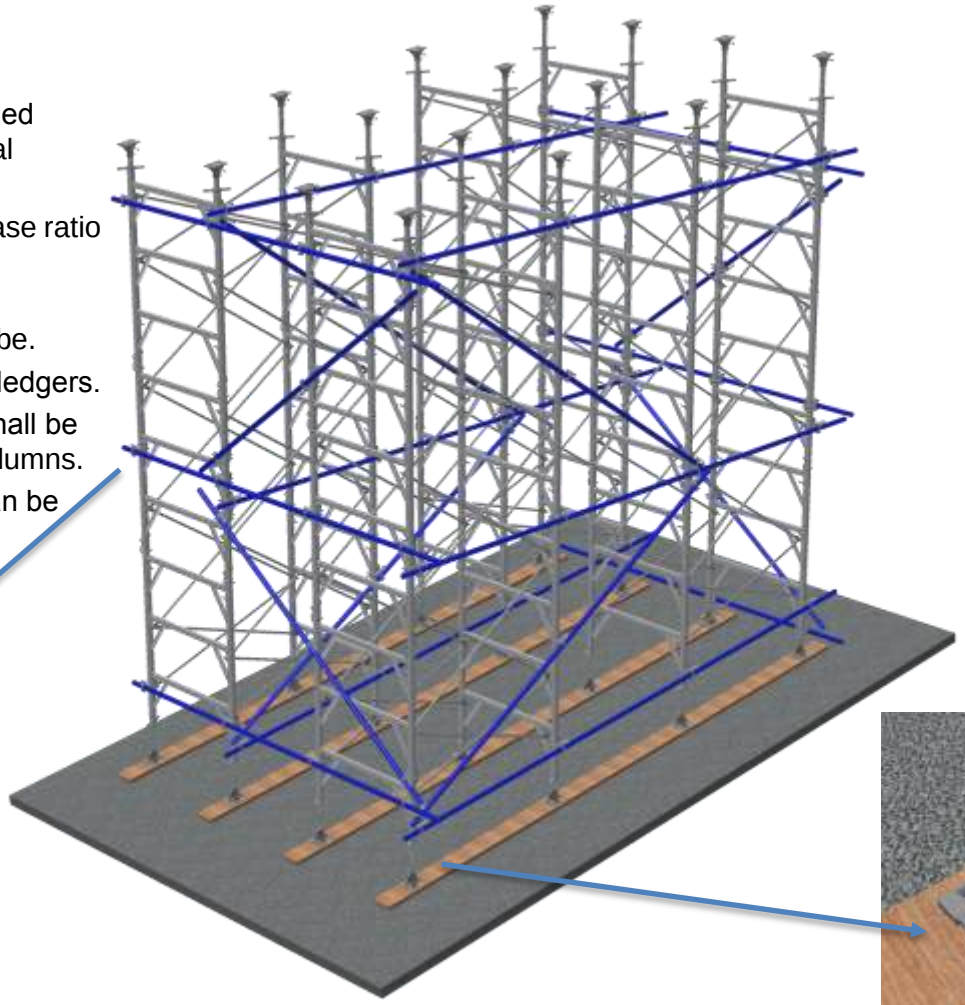

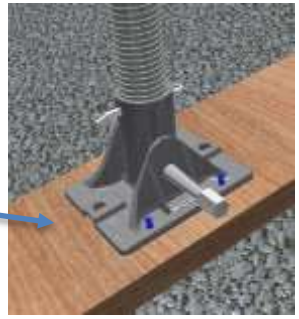

Base Plate nailed directly to mudsill or slab

BE SURE TO CHECK ALL RELEVANT CODES.

This information is subject to change. Latest information may be obtained from JASCO's web site at www.hi-lite-systems.com. Copyright © 2008 by JASCO Sales Inc. All rights reserved. No part of this manual may be used or reproduced in any manner whatsoever without prior written permission.

MAINTAINING FULL LEG LOAD

The continuous T-bolt slots on the 16K Aluminum Shoring system frame legs provide a perfect means of connecting additional Cross Braces to the frames to provide additional lateral stability, often eliminating the need for tube-and-clamp bracing. The T-bolts can be installed into the brace end holes. Straight or cross braces then can be installed readily at any point on the length of the frame leg. The location of the T-bolt slots on all four sides of the leg permits stability bracing and/or lacing in all directions.

Note: The forces induced in tower legs by added bracing must be taken into account in the design of the support system. Consult your Engineer for details.

Do not clamp to rectangular horizontal frame ledgers.

We recommend that additional lateral stability bracing be installed at the mid-height of 7.3m(24ft) to 9.1m(30ft) high towers, and every 5.5m(18ft) [3 frames] if higher.

The towers should be sufficiently diagonally braced to prevent lateral movement, where the walls or columns are not poured before the deck.

Tube-and-clamp can also be used to provide additional stability bracing in both directions. Clamps should be used at every intersection of the bracing tubes with the frame legs. The horizontal tubes should, if possible, be tied to or butted against the permanent structure (such as walls or columns).

Note: If towers are inter-braced and sufficiently Cross Braced between towers, tube-and-clamp may only be needed in one direction or may not be required at all. Consult Hi-Lite Systems or an experienced layout engineer. Guying can also be an alternative for providing additional stability bracing

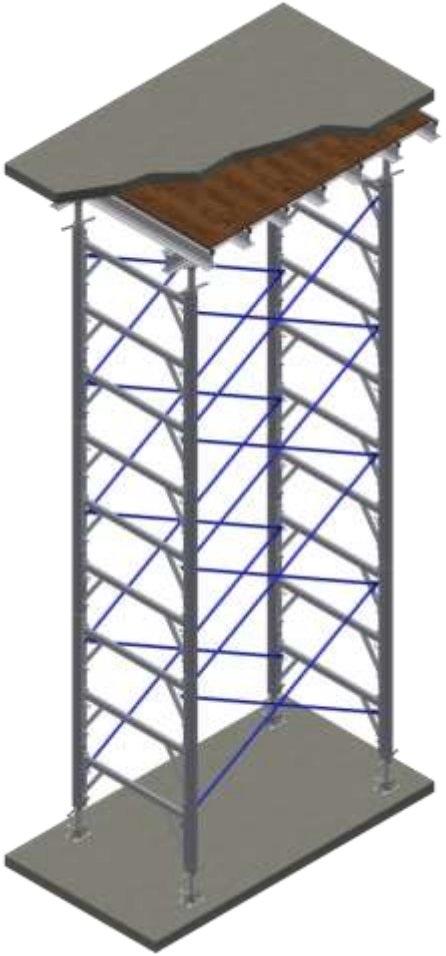

This information is subject to change. Latest information may be obtained from JASCO's web site at www.hi-lite-systems.com. Copyright © 2008 by JASCO Sales Inc. All rights reserved. No part of this manual may be used or reproduced in any manner whatsoever without prior written permission.

INTER-FRAME BRACEING

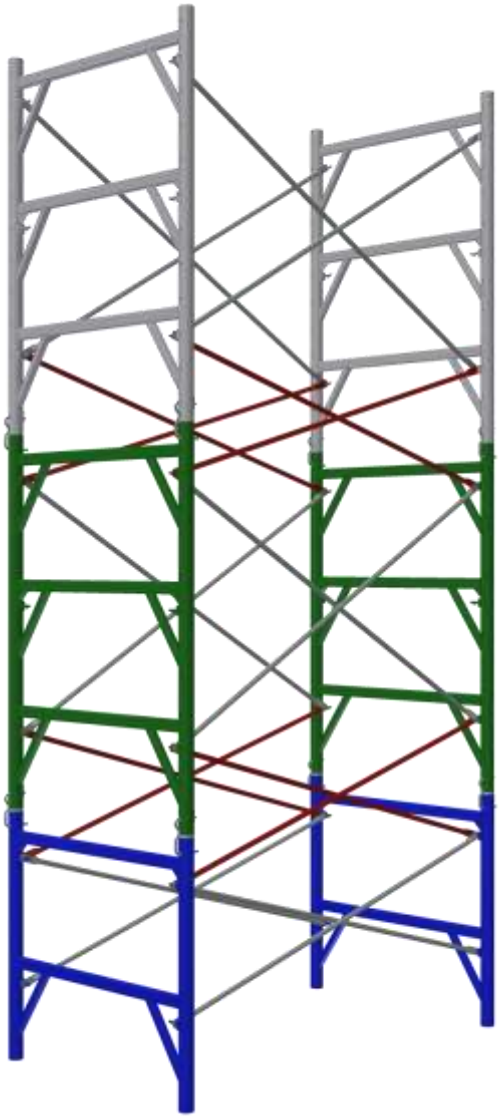

The inter-frame brace utilizes a combination of standard 600mm (2ft) Cross Brace and 1.2m (4ft) Cross Braces.

Jet Locks can also be spaced on 1.2m (4ft) modules on higher frames, allowing continuous 1.2m (4ft) by any length Cross Brace can also be used continually on a high tower, also giving full capacity when continuously braced.

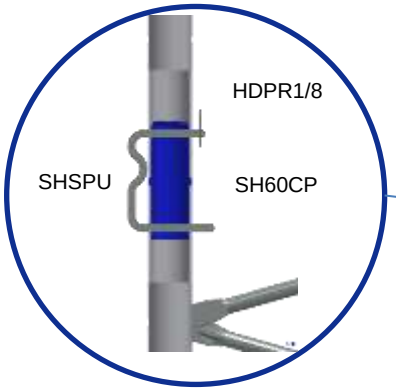

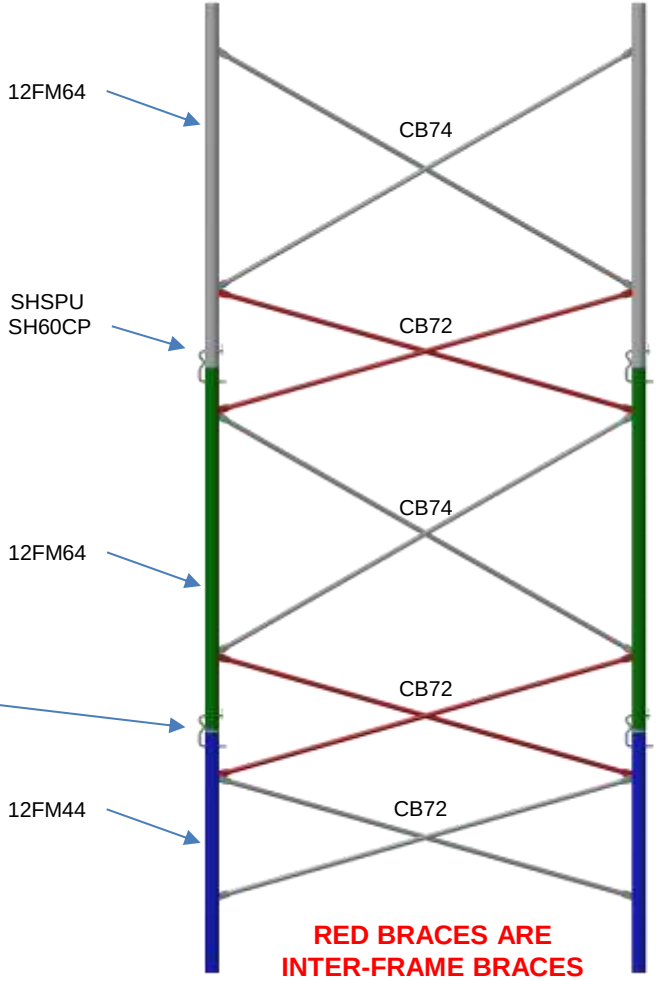

This information is subject to change. Latest information may be obtained from JASCO's web site at www.hi-lite-systems.com. Copyright © 2008 by JASCO Sales Inc. All rights reserved. No part of this manual may be used or reproduced in any manner whatsoever without prior written permission.

INTER-FRAME BRACING ALTERNATIVE

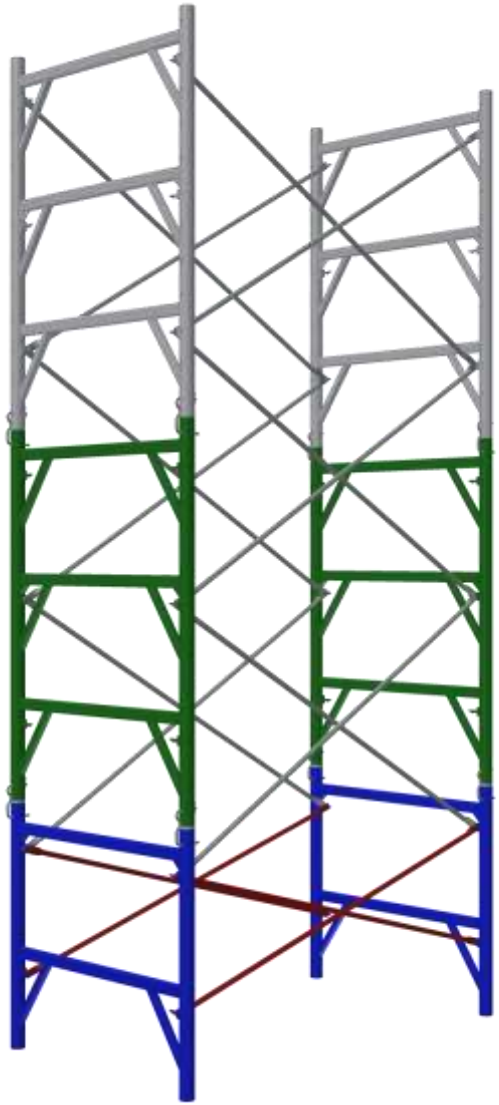

This inter-frame brace utilizes a standard 1.2m (4ft) Cross Brace by the length required. Jet Locks can also be spaced on 1.2m (4ft) modules on higher frames, allowing continuous 1.2m (4ft) by any length Cross Brace can also be used continually on a high tower, also giving full capacity when continuously braced.

Braces both lower and upper frame, creating a full continuous brace.

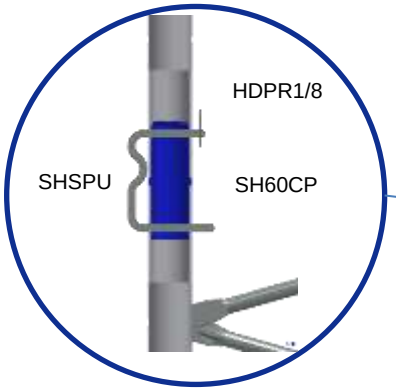

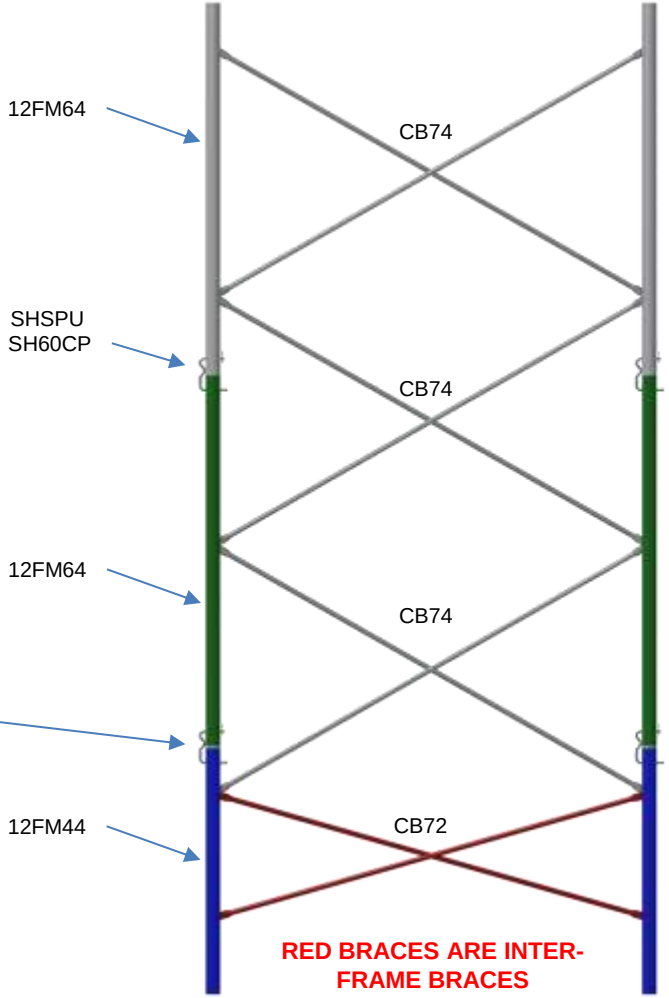

This information is subject to change. Latest information may be obtained from JASCO's web site at www.hi-lite-systems.com. Copyright © 2008 by JASCO Sales Inc. All rights reserved. No part of this manual may be used or reproduced in any manner whatsoever without prior written permission.

6' (1800 mm) HEIGHT THREE FRAME TOWER

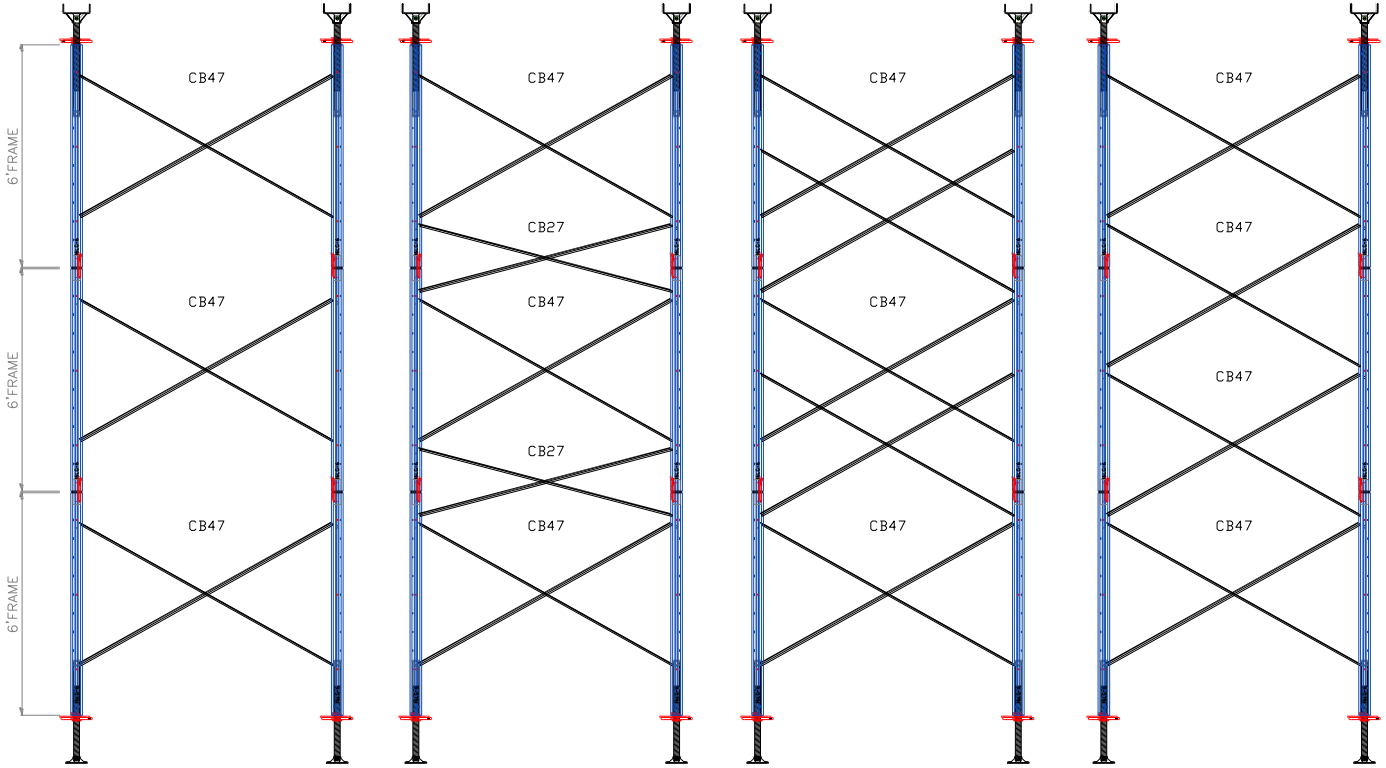

NO INTER-FRAME BRACING
LESS CAPACITY

WITH INTER-FRAME BRACING
DIFFERENT BRACING COMBINATIONS
SAME CAPACITY

This information is subject to change. Latest information may be obtained from HI-LITE's web site at www.hi-lite-systems.com. Copyright © 2013 by HI-LITE SYSTEMS Inc. All rights reserved. No part of this manual may be used or reproduced in any manner whatsoever without prior written permission.

8’ (2400 mm) & 6’ (1800 mm) HEIGHT FRAME TOWER

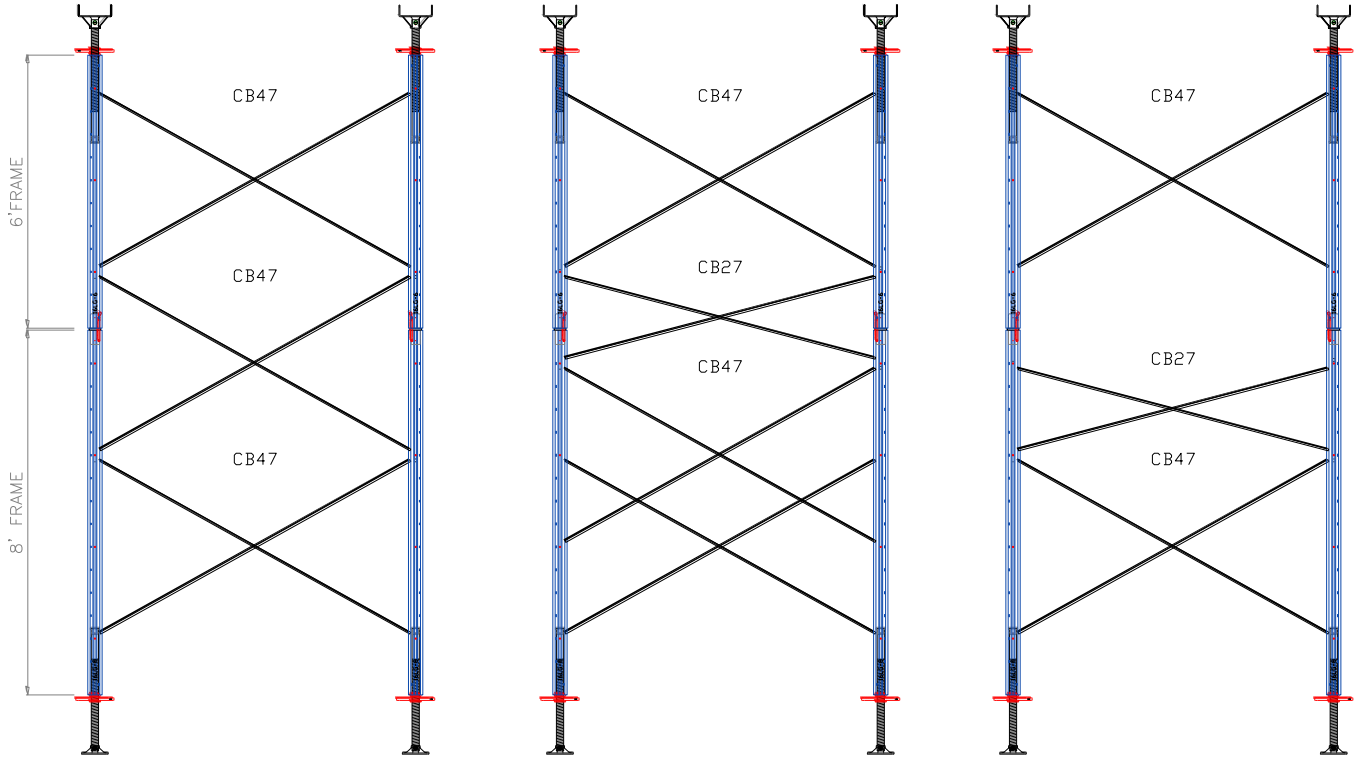

WITH INTER–FRAME BRACING
DIFFERENT BRACING COMBINATIONS
SAME CAPACITY

NO INTER–FRAME BRACING
LESS CAPACITY

This information is subject to change. Latest information may be obtained from HI-LITE’s web site at www.hi-lite-systems.com.
Copyright © 2013 by HI-LITE SYSTEMS Inc. All rights reserved. No part of this manual may be used or reproduced in any manner whatsoever without prior written permission.

8’ (2400 mm) & 4’ (1200 mm) HEIGHT FRAME TOWER

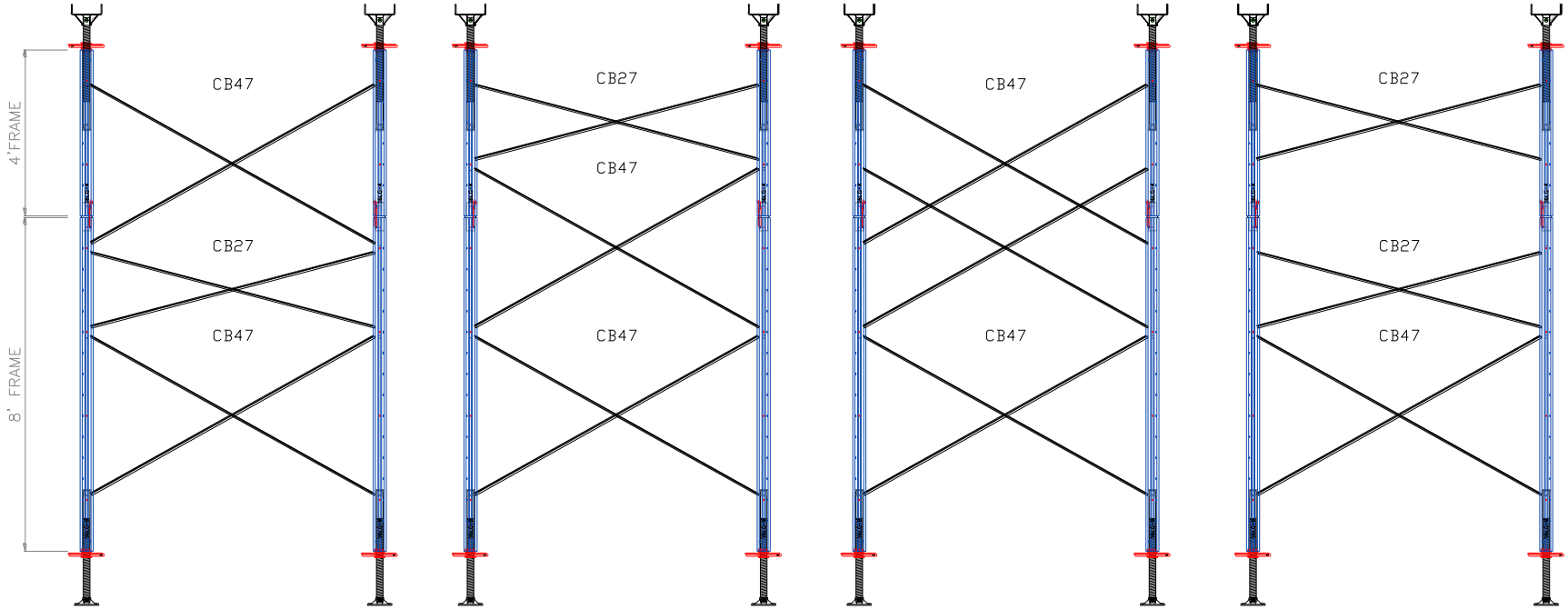

WITH INTER–FRAME BRACING
DIFFERENT BRACING COMBINATIONS
SAME CAPACITY

NO INTER–FRAME BRACING
LESS CAPACITY

This information is subject to change. Latest information may be obtained from HI-LITE’s web site at www.hi-lite-systems.com. Copyright © 2013 by HI-LITE SYSTEMS Inc. All rights reserved. No part of this manual may be used or reproduced in any manner whatsoever without prior written permission.

A **kip** is a non-SI unit of force. It equals 1000 pounds-force, used primarily by American architects and engineers to measure engineering loads. Although uncommon, it is occasionally also considered a unit of mass, equal to 1000 pounds, i.e., one half of a short ton. One use is as a unit of deadweight to compute shipping charges. 1 kip = 4448.2216 newtons (N) = 4.4482216 kilonewtons (kN)

The name comes from combining the words "kilo" and "pound"; it is occasionally called a *kilopound*. Its symbol is **kip**, or less frequently, **klb**. When it is necessary to clearly distinguish it as a unit of force rather than mass, it is sometimes called the *kip-force* (symbol **kipf** or **klbf**). Note that the symbol **kp** usually stands for a different unit of force, the *kilopond* or kilogram-force.

Kilonewtons (kN) are often used for stating safety holding values of fasteners, anchors, and more in the building industry. They are also often used in the specifications for rock climbing equipment. The safe working loads in both tension and shear measurements can be stated in kilonewtons. Injection moulding machines, used to manufacture plastic parts, are classed by kilonewton (i.e., the amount of clamping force they apply to the mould).

On the Earth's surface, 1 kN is about 101.97162 kilogram-force of load, so multiplying the kilonewton value by 100 (i.e. using a slightly conservative and easier to calculate value) is a good rule of thumb.

Units of force					
•vte	newton (SI unit)	dyne	kilogram-force, kilopond	pound-force	poundal
1 N	≡ 1 kg·m/s^2	= 10^5 dyn	≈ 0.10197 kp	≈ 0.22481 lb_F	≈ 7.2330 pdl
1 dyn	= 10^{-5} N	≡ 1 g·cm/s^2	≈ 1.0197 × 10^{-6} kp	≈ 2.2481 × 10^{-6} lb_F	≈ 7.2330 × 10^{-5} pdl
1 kp	= 9.80665 N	= 980665 dyn	≡ g_n·(1 kg)	≈ 2.2046 lb_F	≈ 70.932 pdl
1 lb_F	≈ 4.448222 N	≈ 444822 dyn	≈ 0.45359 kp	≡ g_n·(1 lb)	≈ 32.174 pdl
1 pdl	≈ 0.138255 N	≈ 13825 dyn	≈ 0.014098 kp	≈ 0.031081 lb_F	≡ 1 lb·ft/s^2
The value of g_n as used in the official definition of the kilogram-force is used here for all gravitational units					

This information is subject to change. Latest information may be obtained from JASCO's web site at www.hi-lite-systems.com. Copyright © 2008 by JASCO Sales Inc. All rights reserved. No part of this manual may be used or reproduced in any manner whatsoever without prior written permission.

16K - TOWER CAPACITIES

Tower Capacities with Jacks only or Equivalent Extension

THREE FRAMES HIGH "WITH" INTERFRAME CROSS BRACE

SCREW JACK EXTENSION	SAFE WORKING LOAD (2.5:1)	
12" AT TOP AND 12" AT BOTTOM	16.27 Kips / Leg	72.37 kN / Leg
18" AT TOP AND 18" AT BOTTOM	13.48 Kips / Leg	59.96 kN / Leg
24" AT TOP AND 24" AT BOTTOM	11.66 Kips / Leg	51.87 kN / Leg

THREE FRAMES HIGH "WITHOUT" INTERFRAME CROSS BRACE

SCREW JACK EXTENSION	SAFE WORKING LOAD (2.5:1)	
12" AT TOP AND 12" AT BOTTOM	14.43 Kips / Leg	64.19 kN / Leg
18" AT TOP AND 18" AT BOTTOM	12.73 Kips / Leg	56.63 kN / Leg
24" AT TOP AND 24" AT BOTTOM	11.00 Kips / Leg	48.93 kN / Leg

TWO FRAMES HIGH "WITH" INTERFRAME CROSS BRACE

SCREW JACK EXTENSION	SAFE WORKING LOAD (2.5:1)	
12" AT TOP AND 12" AT BOTTOM	16.24 Kips / Leg	72.24 kN / Leg
18" AT TOP AND 18" AT BOTTOM	14.35 Kips / Leg	63.83 kN / Leg
24" AT TOP AND 24" AT BOTTOM	12.43 Kips / Leg	55.29 kN / Leg

TWO FRAMES HIGH "WITHOUT" INTERFRAME CROSS BRACE

SCREW JACK EXTENSION	SAFE WORKING LOAD (2.5:1)	
12" AT TOP AND 12" AT BOTTOM	15.51 Kips / Leg	68.99 kN / Leg
18" AT TOP AND 18" AT BOTTOM	13.47 Kips / Leg	59.92 kN / Leg
24" AT TOP AND 24" AT BOTTOM	11.17 Kips / Leg	46.69 kN / Leg

ONE FRAME HIGH

SCREW JACK EXTENSION	SAFE WORKING LOAD (2.5:1)	
12" AT TOP AND 12" AT BOTTOM	16.25 Kips / Leg)	72.28 kN / Leg
18" AT TOP AND 18" AT BOTTOM	14.14 Kips / Leg	62.9 kN / Leg
24" AT TOP AND 24" AT BOTTOM	12.08 Kips / Leg	53.73 kN / Leg

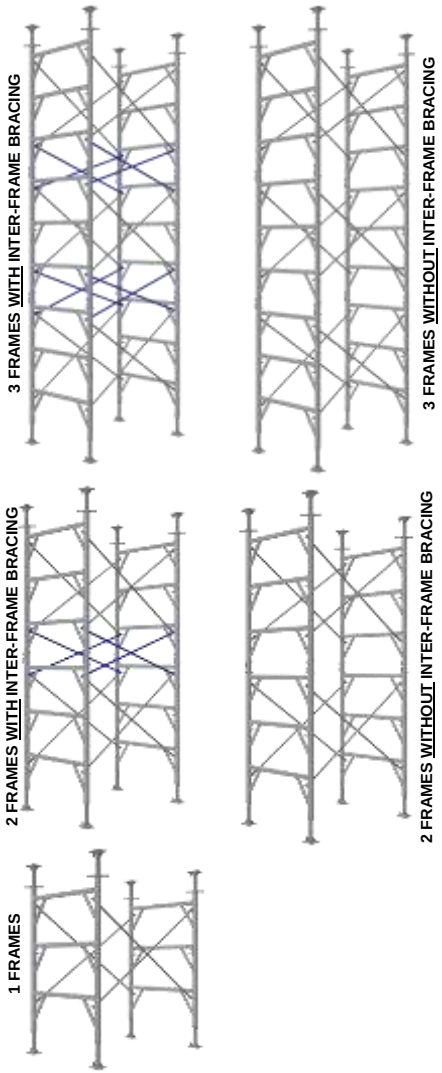

NOTE: I kip = 4.448222 kN
**** The Test Was Stopped At Full Load**

This information is subject to change. Latest information may be obtained from JASCO's web site at www.hi-lite-systems.com. Copyright © 2008 by JASCO Sales Inc. All rights reserved. No part of this manual may be used or reproduced in any manner whatsoever without prior written permission.

Saddle Beam Allowable Loading

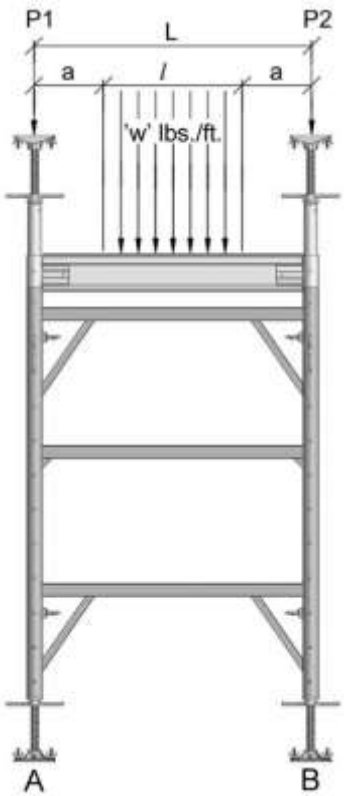

Total Load per Frame Leg (based on central loading of Saddle Beam)

A = P1 + ½ wl

B = P2 + ½ wl

1. **The total load per leg shall not exceed the load ratings expressed on the Tower Capacity chart (pages 7 & 8).**
2. **Axial Loads P1 and P2 shall not exceed the ratings for the Extension Tubes shown on Table 5 (page 8).**
3. **The uniformly distributed loads on the Saddle Beam shall not exceed the maximum distributed loads listed on the following table:**

SADDLE BEAM LOADING CHART FOR HI-LITE 6½" ALUMINUM BEAM

Saddle Beam Length		Maximum Allowable Distributed Load							
L		a = 6"	150 mm	a = 12"	300 mm	a = 18"	450 mm	a = 24"	600 mm
Feet	mm	lb/ft	kg/m	lb /ft	kg/m	lb/ft	kg/m	lb/ft	kg/m
4' 0"	1219	3,300	4,917	4,400	6,556	6,630	9,878	----	----
5' 0"	1524	2,000	2,980	2,500	3,725	3,300	4,910	5,800	8,630
6' 0"	1828	1,475	2,198	1,650	2,459	1,900	2,831	2,600	3,868
7' 0"	2134	1,050	1,565	1,150	1,714	1,300	1,937	1,600	2,380

NOTE: The limiting factor governing load figures in the above table is flexural stress in all cases. Deflection is limited to 1/270 of the span.

This information is subject to change. Latest information may be obtained from JASCO's web site at www.hi-lite-systems.com. Copyright © 2008 by JASCO Sales Inc. All rights reserved. No part of this manual may be used or reproduced in any manner whatsoever without prior written permission.

ERECTING TOWERS

The continuous T-bolt slots on the 16K Aluminum Shoring system frame legs provide a perfect means of connecting additional Cross Braces to the frames to provide additional lateral stability, often eliminating the need for tube-and-clamp bracing. The T-bolts can be installed into the brace end holes. Straight or cross braces then can be installed readily at any point on the length of the frame leg. The location of the T-bolt slots on all four sides of the leg permits stability bracing and/or lacing in all directions.

Note: The forces induced in tower legs by added bracing must be taken into account in the design of the support system. Consult your Engineer for details.

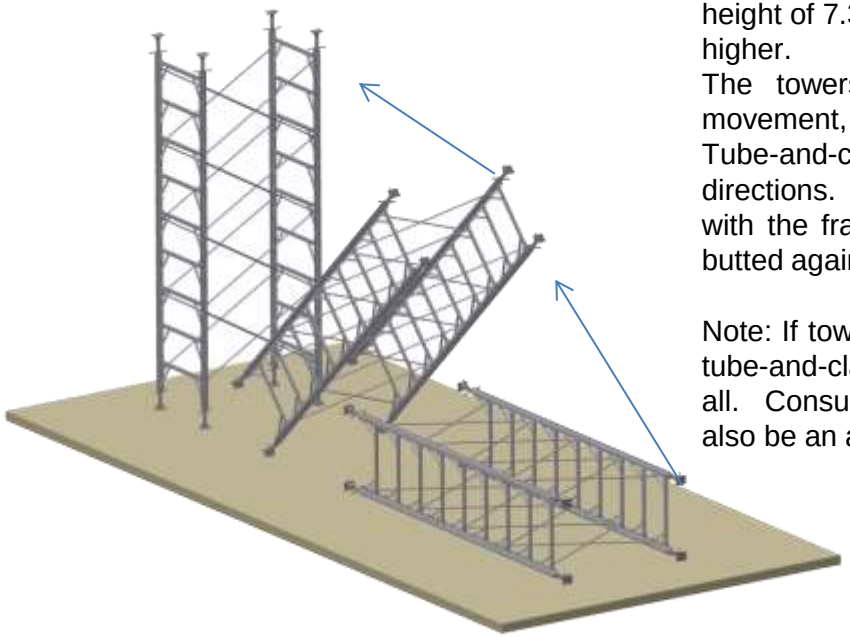

Do not clamp to rectangular horizontal frame ledgers.

We recommend that additional lateral stability bracing be installed at the mid-height of 7.3m(24ft) to 9.1m(30ft) high towers, and every 5.5m(18ft) [3 frames] if higher.
The towers should be sufficiently diagonally braced to prevent lateral movement, where the walls or columns are not poured before the deck.
Tube-and-clamp can also be used to provide additional stability bracing in both directions. Clamps should be used at every intersection of the bracing tubes with the frame legs. The horizontal tubes should, if possible, be tied to or butted against the permanent structure (such as walls or columns).

Note: If towers are inter-braced and sufficiently Cross Braced between towers, tube-and-clamp may only be needed in one direction or may not be required at all. Consult Hi-Lite Systems or an experienced layout engineer. Guying can also be an alternative for providing additional stability bracing.

This information is subject to change. Latest information may be obtained from JASCO's web site at www.hi-lite-systems.com. Copyright © 2008 by JASCO Sales Inc. All rights reserved. No part of this manual may be used or reproduced in any manner whatsoever without prior written permission.

ECONOMICAL SET-UP PROCEDURES

The most economical setup occurs where Screw Jack adjustment is only needed at one end of the tower as shown in illustration IL-1 pg. 26.

When erecting on level concrete, etc. always use the jacks on top and the Extension Tubes at the bottom. This saves considerable time in leveling each tower, provides for easy movement into location, and to the next location, often without reassemble. This works well on towers even up to 4 frames high, providing the base is solid and level. If working from mudsills or a sloping foundation, always use the Screw Jacks on the bottom.

Always set the Screw Jacks 12mm (1/2in) to 25mm (1in) high before installing, so that when it is time to level the deck, you just tap the adjusting nut handle to level. If you have the room, and are setting 2 or 3 frames high, assemble on the ground and raise as a unit, again with Screw Jacks already installed in the tops of the frame legs. This, when it is possible to carry out, will reduce man-hours by over 70%.

NOTE: Considerable time (man-hours) can be saved with the Hi-Lite's Aluminum Shoring Systems, providing some planning goes into the erecting procedures. Ideas include using Extension Tubes and plates on the bottom. If the tower consists of one 4ft high frame and one 6ft high frame, put the 4ft high frame on the bottom and the 6ft high frame at the top, with Screw Jacks already installed in the tops of the legs -- if you have two strong men. Otherwise, the Screw Jacks will have to be installed later. By putting the 1.2m (4ft) frame at the bottom, you will also be able to set the braces from the ground, saving plank handling and climbing to set braces and Screw Jacks.

Description of Various Set-Up Combinations

Hi-Lite' *Aluminum Shoring S*ystems are very versatile in allowing many different set-ups for various conditions and applications. A number of various set-ups for one-frame-high towers are illustrated below and on the following pages.

IMPORTANT: Always keep extension to a minimum for safety and use the highest frame possible for maximum load. If you have to extend, example IL-2 is the best way to set up or IL-5 if on mud sills or uneven ground.

CONSULT HI-LITE IF YOU HAVE ANY QUESTIONS ABOUT SET-UP OR LOAD-CARRYING CAPABILITY.

This information is subject to change. Latest information may be obtained from JASCO's web site at www.hi-lite-systems.com. Copyright © 2008 by JASCO Sales Inc. All rights reserved. No part of this manual may be used or reproduced in any manner whatsoever without prior written permission.

II -1: height range: min - 1370mm (54in) to max - 1850mm (73in) fine adjustment at top only

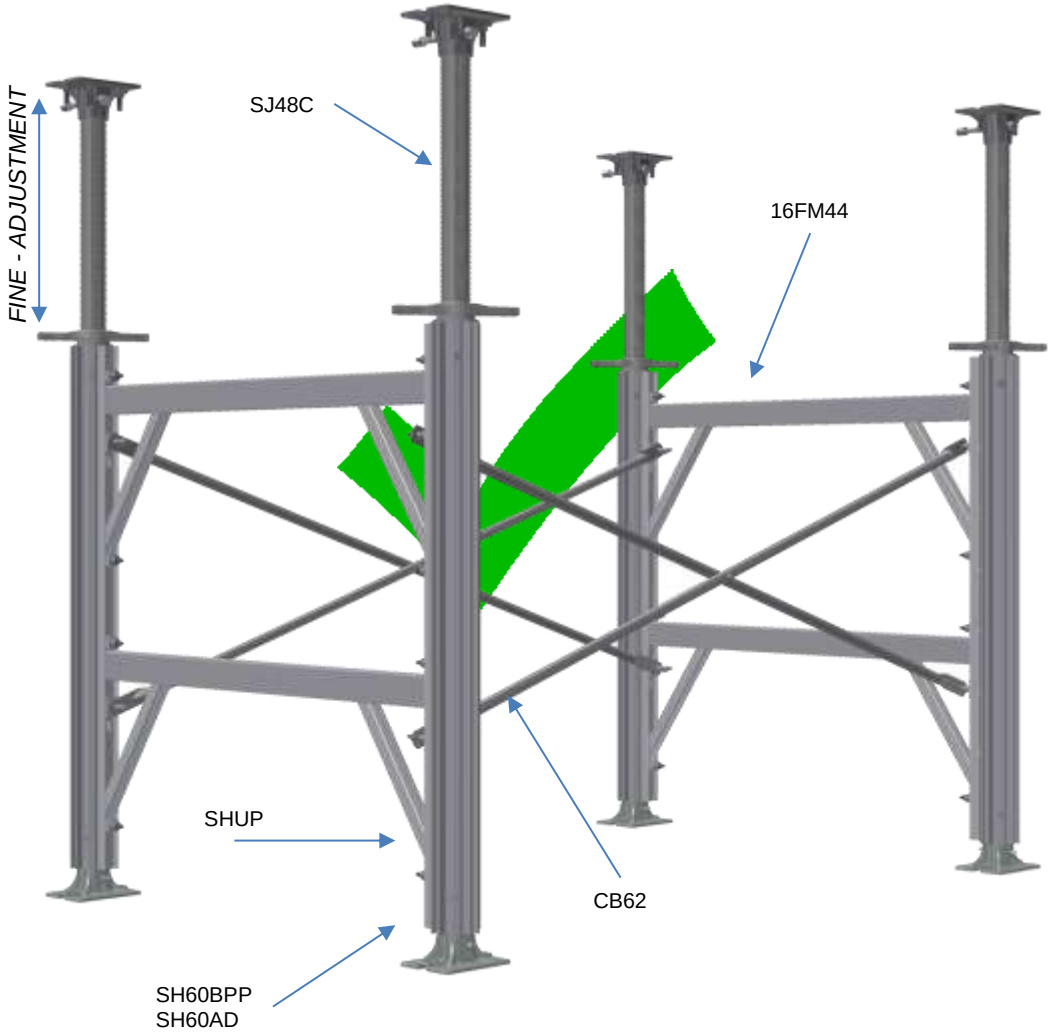

GOOD SET-UP. USED WHERE THE TOWER SITS ON LEVEL CONCRETE.

NOTE: Always try to use approximately the same amount of extension at the top as on the bottom. We recommend that when 1.5m (60in) and 2.1m (72in) extension tubes are used in frames, they should be braced in both directions

This information is subject to change. Latest information may be obtained from JASCO's web site at www.hi-lite-systems.com. Copyright © 2008 by JASCO Sales Inc. All rights reserved. No part of this manual may be used or reproduced in any manner whatsoever without prior written permission.

II -2: height range: min - 1830mm (72in) to max - 2430mm (96in) fine adjustment at top, coarse adjustment at bottom

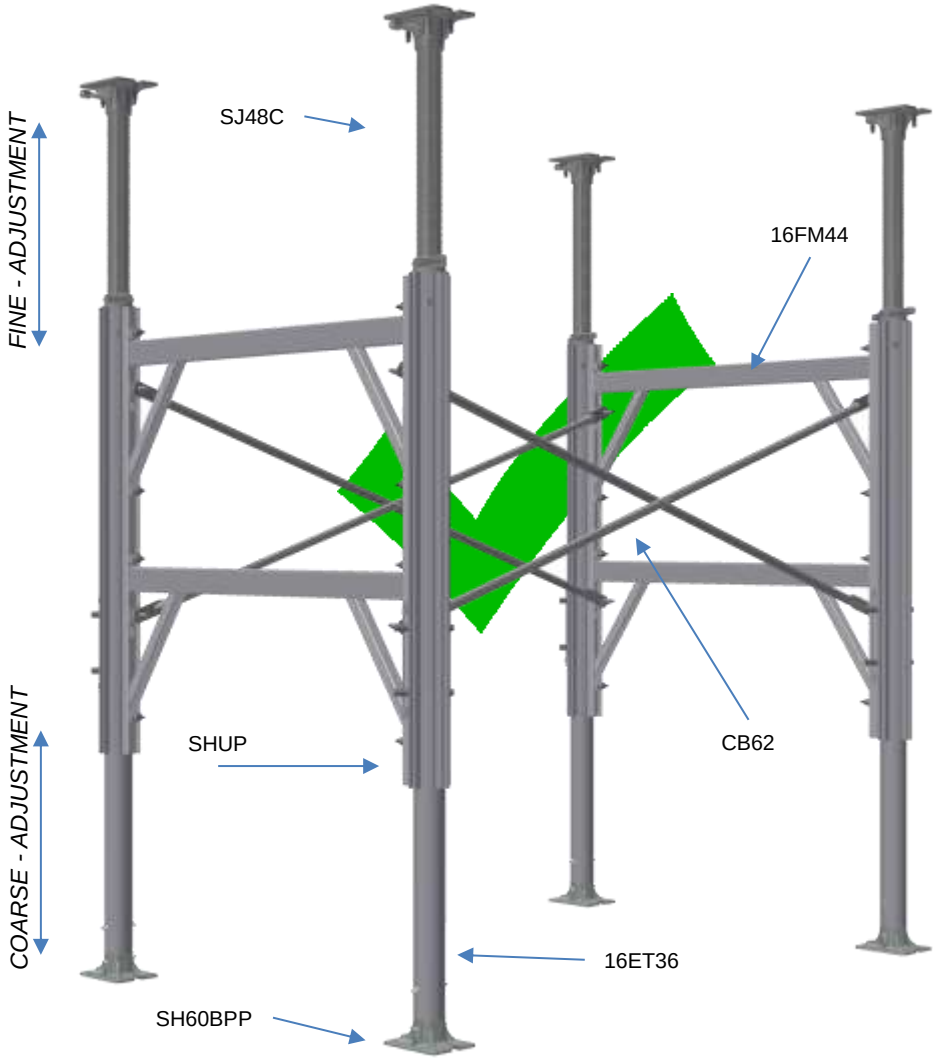

GOOD SET-UP. USED WHERE THE TOWER SITS ON LEVEL CONCRETE.

NOTE: Always try to use approximately the same amount of extension at the top as on the bottom. We recommend that when 1.5m (60in) and 2.1m (72in) extension tubes are used in frames, they should be braced in both directions

This information is subject to change. Latest information may be obtained from JASCO's web site at www.hi-lite-systems.com. Copyright © 2008 by JASCO Sales Inc. All rights reserved. No part of this manual may be used or reproduced in any manner whatsoever without prior written permission.

II -3: height range: min - 1830mm (72in) to max - 2430mm (96in) coarse adjustment at top, fine adjustment at bottom

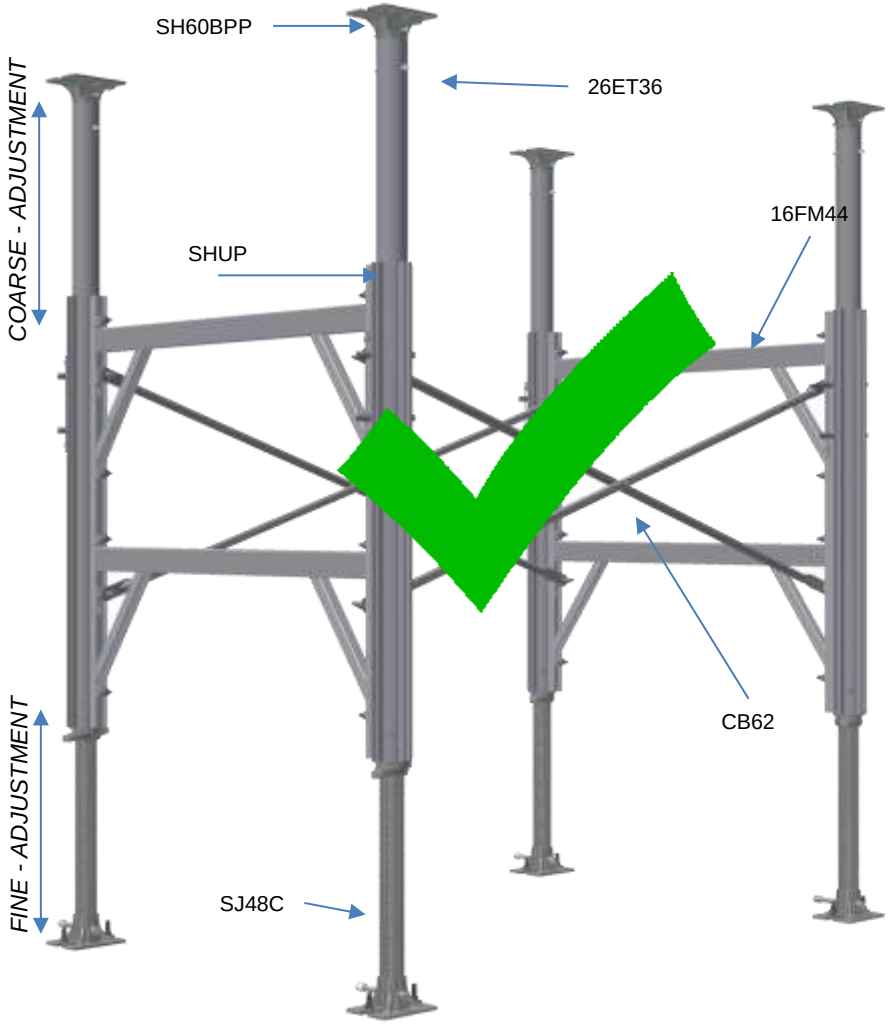

NOTE: GOOD SET-UP: USED WHERE THE TOWER SITS ON LEVEL CONCRETE AND A FAIR AMOUNT OF ADJUSTMENT IS REQUIRED.

NOTE: Always try to use approximately the same amount of extension at the top as on the bottom. We recommend that when 1.5m (60in) and 2.1m (72in) extension tubes are used in frames, they should be braced in both directions

This information is subject to change. Latest information may be obtained from JASCO's web site at www.hi-lite-systems.com. Copyright © 2008 by JASCO Sales Inc. All rights reserved. No part of this manual may be used or reproduced in any manner whatsoever without prior written permission.

SET-UP EXAMPLES

IL-4

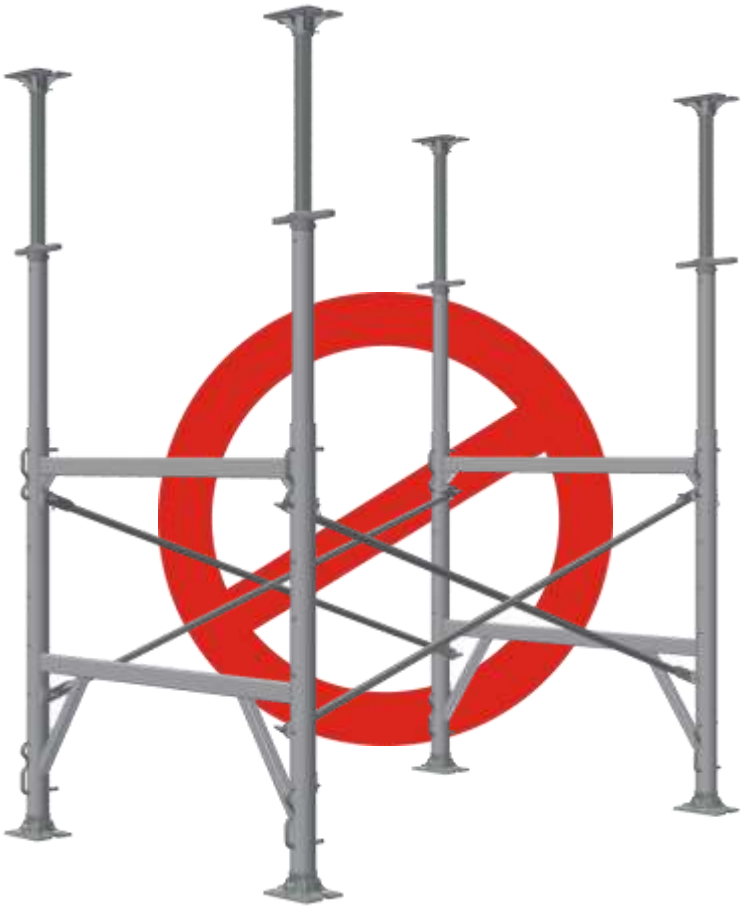

IL-5

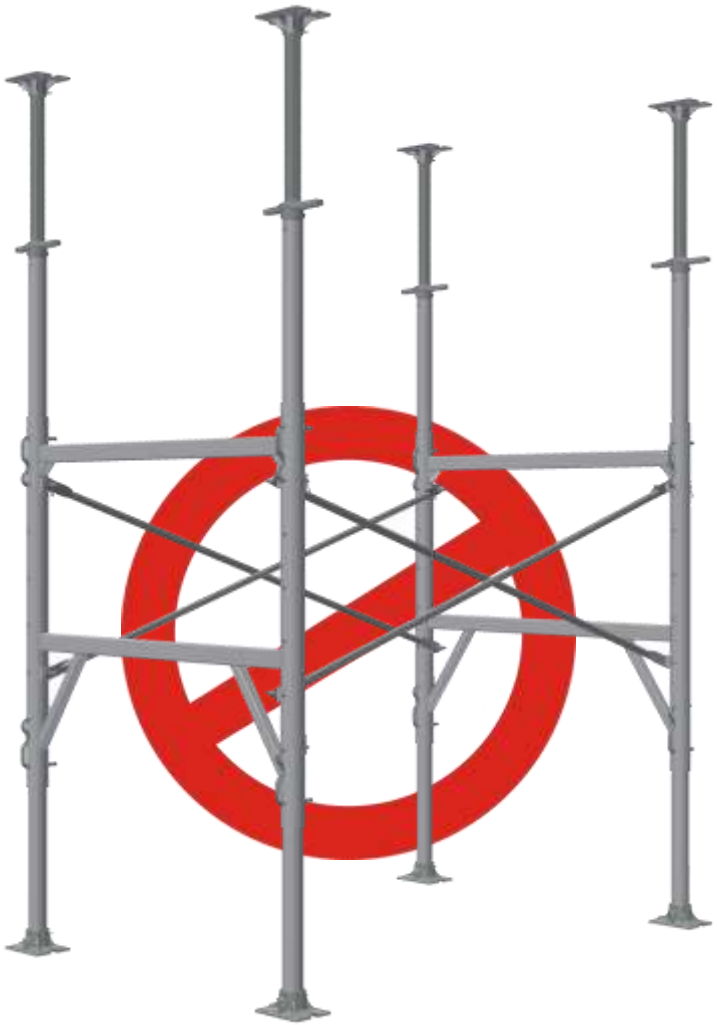

BAD SET-UP(s) (UNBALANCED), FOR USE WHERE THE TOWER SITS ON LEVEL CONCRETE AND REQUIRES EXTENSION AT ONE END

This information is subject to change. Latest information may be obtained from JASCO's web site at www.hi-lite-systems.com. Copyright © 2008 by JASCO Sales Inc. All rights reserved. No part of this manual may be used or reproduced in any manner whatsoever without prior written permission.

EXTENSION TUBES

1. **Extension Tube with Screw Jack on top**

2. **Extension Tube with incorrect placement of U-Pin**

3. **Extension Tube with Base Plate on top**

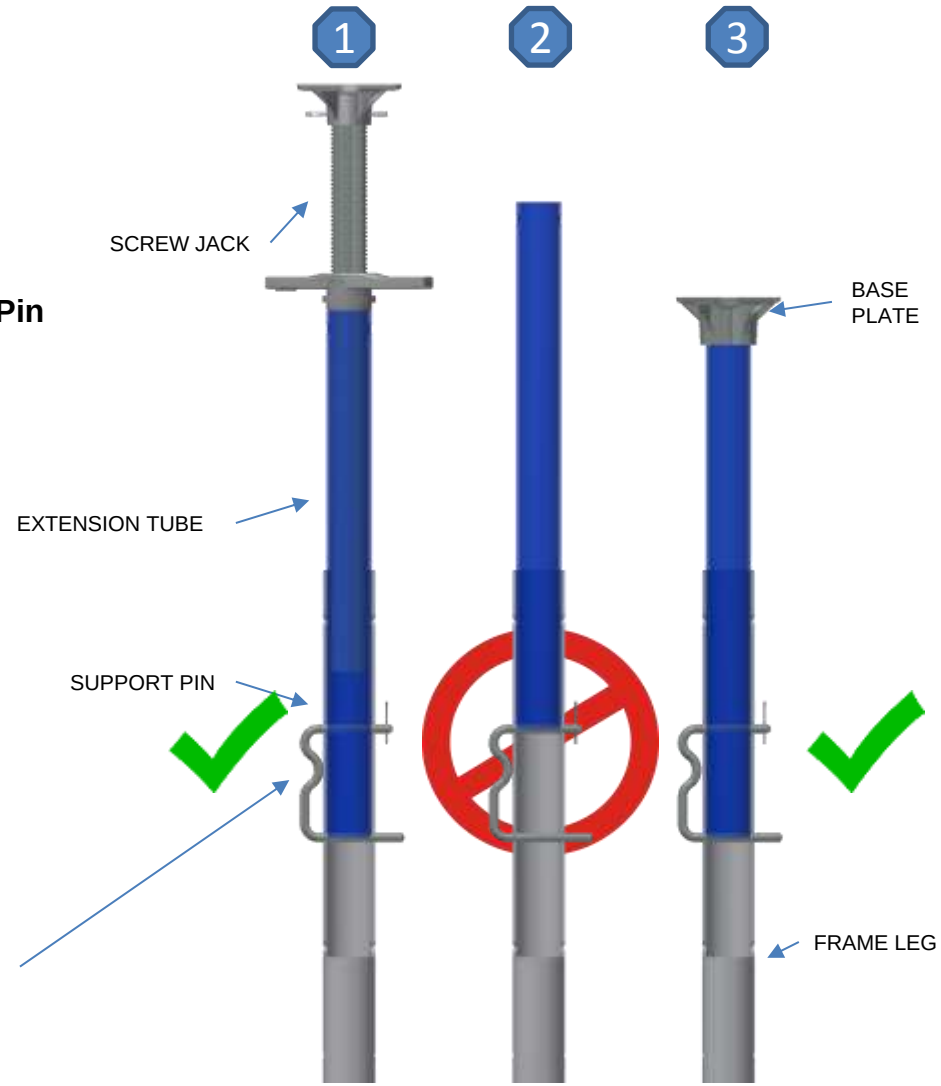

ALWAYS ENSURE THAT U-PIN IS PROPERLY ENGAGED INTO BOTH THE FULL AND ½ HOLE OF THE EXTENSION TUBE TO PROVIDE EQUAL DISTRIBUTION OF LOAD BEARING ON THE U-PIN AND FRAME LEG.

This information is subject to change. Latest information may be obtained from JASCO's web site at www.hi-lite-systems.com. Copyright © 2008 by JASCO Sales Inc. All rights reserved. No part of this manual may be used or reproduced in any manner whatsoever without prior written permission.

FALL PREVENTION

16K 4 foot HIGH FRAME

ALL THE ERECTION CREW MUST BE EQUIPPED WITH HARNESSES AND DOUBLE LANYARDS.

HARNESSES SHOULD BE SAFELY ATTACHED TO HORIZONTAL MEMBERS OF THE FRAME IN THE LOCATIONS SHOWN ON DIAGRAM

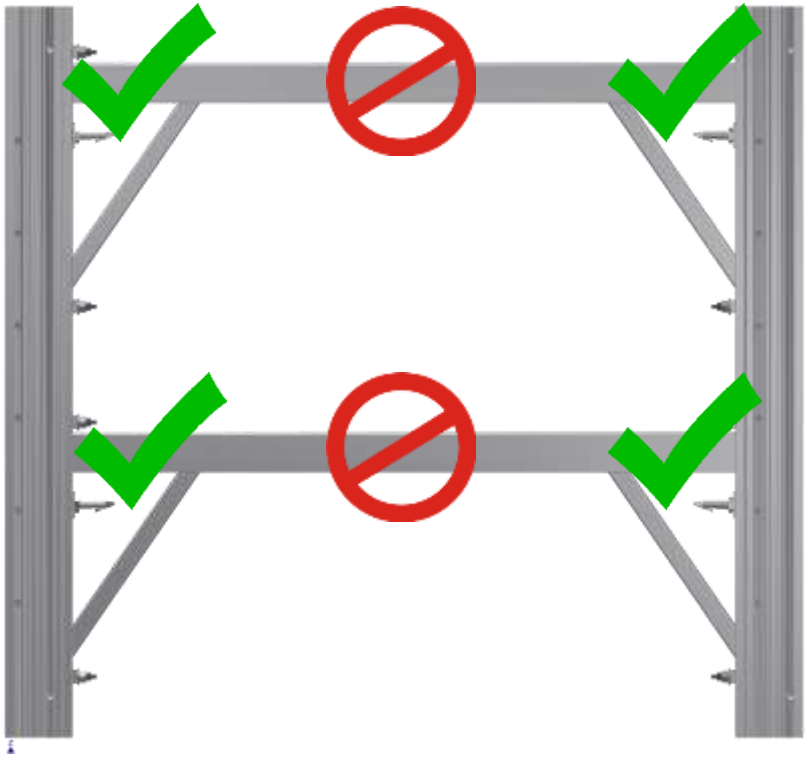

NOTE: IT IS VERY IMPORTANT TO NOTE THAT THE HANGING POINTS SHOULD BE BETWEEN THE KNEE BRACE AND THE FRAME LEG – INDICATED IN THE ATTACHED SKETCH. IT SHOULD NEVER BE FROM THE MIDDLE OF THE FRAME.

This information is subject to change. Latest information may be obtained from HI-LITE's web site at www.hi-lite-systems.com. Copyright © 2013 by HI-LITE SYSTEMS Inc. All rights reserved. No part of this manual may be used or reproduced in any manner whatsoever without prior written permission.

FALL PREVENTION

16K 5 foot HIGH FRAME

ALL THE ERECTION CREW MUST BE EQUIPPED WITH HARNESSES AND DOUBLE LANYARDS.

HARNESSES SHOULD BE SAFELY ATTACHED TO HORIZONTAL MEMBERS OF THE FRAME IN THE LOCATIONS SHOWN ON DIAGRAM

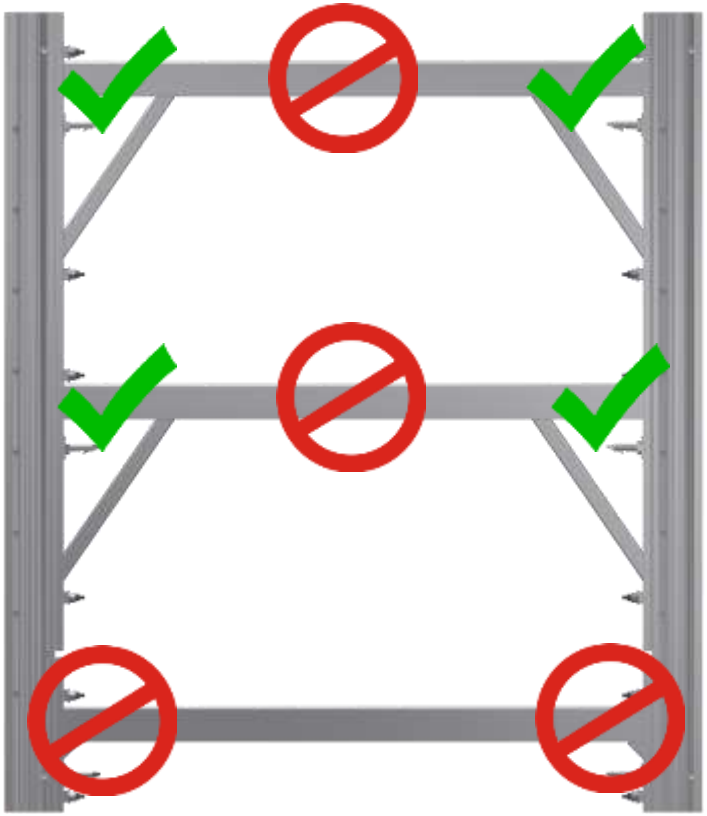

NOTE: IT IS VERY IMPORTANT TO NOTE THAT THE HANGING POINTS SHOULD BE BETWEEN THE KNEE BRACE AND THE FRAME LEG – INDICATED IN THE ATTACHED SKETCH. IT SHOULD NEVER BE FROM THE MIDDLE OF THE FRAME.

This information is subject to change. Latest information may be obtained from HI-LITE's web site at www.hi-lite-systems.com. Copyright © 2013 by HI-LITE SYSTEMS Inc. All rights reserved. No part of this manual may be used or reproduced in any manner whatsoever without prior written permission.

FALL PREVENTION

ALL THE ERECTION CREW MUST BE EQUIPPED WITH HARNESSES AND DOUBLE LANYARDS.

HARNESSES SHOULD BE SAFELY ATTACHED TO HORIZONTAL MEMBERS OF THE FRAME IN THE LOCATIONS SHOWN ON DIAGRAM

NOTE: IT IS VERY IMPORTANT TO NOTE THAT THE HANGING POINTS SHOULD BE BETWEEN THE KNEE BRACE AND THE FRAME LEG – INDICATED IN THE ATTACHED SKETCH. IT SHOULD NEVER BE FROM THE MIDDLE OF THE FRAME.

16K 6 foot HIGH FRAME

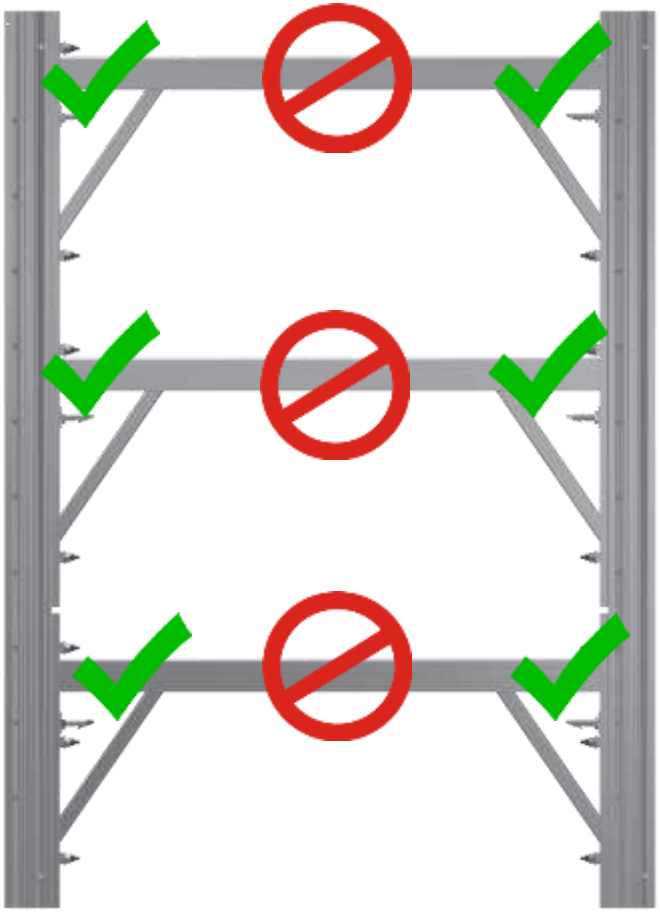

This information is subject to change. Latest information may be obtained from HI-LITE's web site at www.hi-lite-systems.com. Copyright © 2013 by HI-LITE SYSTEMS Inc. All rights reserved. No part of this manual may be used or reproduced in any manner whatsoever without prior written permission.

FALL PREVENTION

ALL THE ERECTION CREW MUST BE EQUIPPED WITH HARNESSES AND DOUBLE LANYARDS.

HARNESSES SHOULD BE SAFELY ATTACHED TO HORIZONTAL MEMBERS OF THE FRAME IN THE LOCATIONS SHOWN ON DIAGRAM

NOTE: IT IS VERY IMPORTANT TO NOTE THAT THE HANGING POINTS SHOULD BE BETWEEN THE KNEE BRACE AND THE FRAME LEG – INDICATED IN THE ATTACHED SKETCH. IT SHOULD NEVER BE FROM THE MIDDLE OF THE FRAME.

16K 8 foot HIGH FRAME

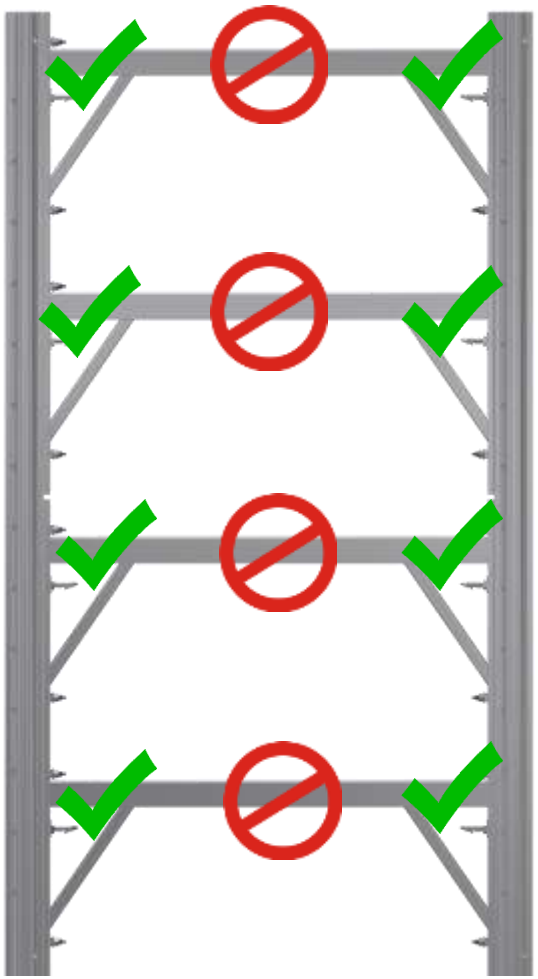

This information is subject to change. Latest information may be obtained from HI-LITE's web site at www.hi-lite-systems.com. Copyright © 2013 by HI-LITE SYSTEMS Inc. All rights reserved. No part of this manual may be used or reproduced in any manner whatsoever without prior written permission.

16K - PARTS

16FM42
1.2mx0.6m (4'x2') HxW
15.0 kgs / 33.1 lbs

16FM44
1.2mx1.2m (4'x4') HxW
16.7 kgs / 36.8 lbs

16FM46
1.2mx1.8m (4'x6') HxW
18.4 kgs / 40.6 lbs

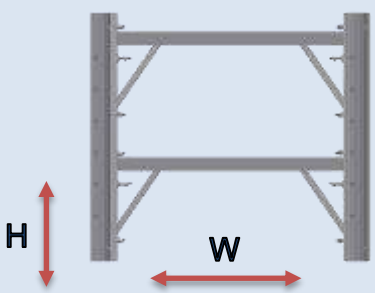

16FM52
1.5mx0.6m (5'x2') HxW
19.2 kgs / 42.3 lbs

16FM54
1.5mx1.2m (5'x4') HxW
21.7 kgs / 47.8 lbs

16FM56
1.5mx1.8m (5'x6') HxW
24.3 kgs / 53.6 lbs

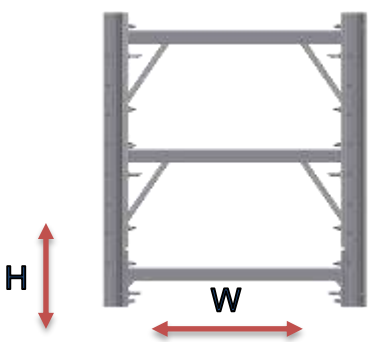

16FM62
1.8mx0.6m (6'x2') HxW
23.1 kgs / 50.9 lbs

16FM64
1.8mx1.2m (6'x4') HxW
25.6 kgs / 56.4 lbs

16FM66
1.8mx1.8m (6'x6') HxW
28.2 kgs / 62.2 lbs

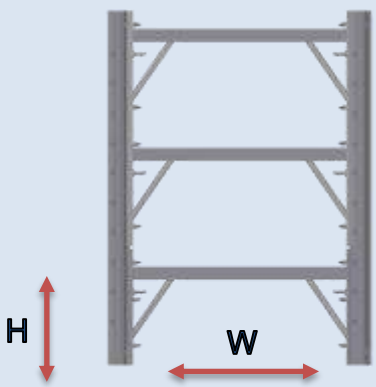

16FM82
2.4mx0.6m (8'x2') HxW
30.0 kgs / 66.1 lbs

16FM84
2.4mx1.2m (8'x4') HxW
33.5 kgs / 73.9 lbs

16FM86
2.4mx1.8m (8'x6') HxW
36.9 kgs / 81.4 lbs

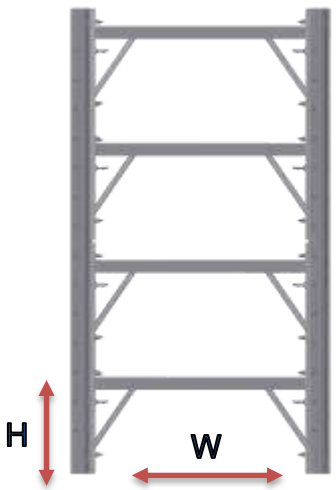

This information is subject to change. Latest information may be obtained from JASCO's web site at www.hi-lite-systems.com. Copyright © 2008 by JASCO Sales Inc. All rights reserved. No part of this manual may be used or reproduced in any manner whatsoever without prior written permission.

16K ACCESSORIES - PARTS

16LG4
16K Aluminul Leg 1.2m (4')
4.35 kgs / 9.6 lbs

16LG5
16K Aluminul Leg 1.5m (5')
5.58 kgs / 12.3 lbs

16LG6
16K Aluminul Leg 1.8m (6')
6.7 kgs / 14.7 lbs

16LG8
16K Aluminul Leg 2.4m (8')
8.94 kgs / 19.7 lbs

ML11X2
Modular Ledger 0.28 x 0.6m
(11" x 2') HxW, 2.0 kgs / 4.4 lbs

ML11X44
Modular Ledger 0.28 x 1.2m
(11" x 4') HxW 2.81 kgs / 6.2 lbs

ML11X6
Modular Ledger 0.28 x 1.8m
(11" x 6') HxW 3.67 kgs / 8.1 lbs

ML23X2
Modular Ledger 0.58 x 0.6m
(23" x 2') HxW, 3.62 kgs / 8.0 lbs

ML23X44
Modular Ledger 0.58 x 1.2m
(23" x 4') HxW 4.5 kgs / 9.9 lbs

ML23X6
Modular Ledger 0.58 x 1.8m
(23" x 6') HxW 5.35 kgs / 11.8 lbs

ML47X2
Modular Ledger 1.2 x 0.6m
(47" x 2') HxW, 6.12 kgs / 13.5 lbs

ML47X44
Modular Ledger 1.2 x 1.2m
(47" x 4') HxW 7.8 kgs / 17.2 lbs

ML47X6
Modular Ledger 1.2 x 1.8m
(47" x 6') HxW 9.52 kgs / 21.0 lbs

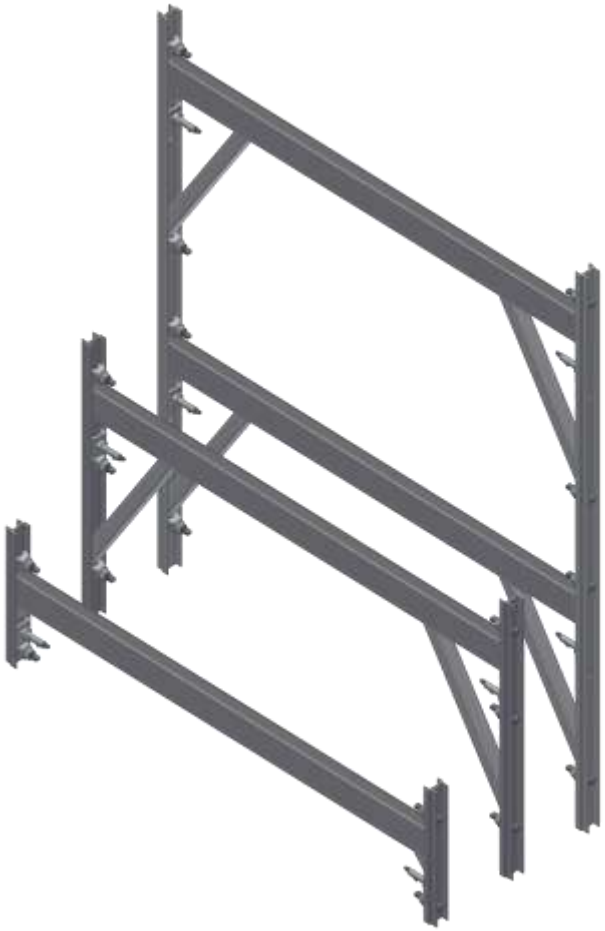

This information is subject to change. Latest information may be obtained from JASCO's web site at www.hi-lite-systems.com. Copyright © 2008 by JASCO Sales Inc. All rights reserved. No part of this manual may be used or reproduced in any manner whatsoever without prior written permission.

16K ACCESSORIES - PARTS

SH60CP
16K Coupling Pin
0.5 kgs / 1.1lbs

16ET30
16K Extension Tube 0.91m (30in)
2.4 kgs / 5.3 lbs

16ET48
16K Extension Tube 1.2m (48in)
3.2 kgs / 7.0 lbs

16ET60
16K Extension Tube 1.5m (60in)
4.95 kgs / 8.7 lbs

16ET72
16K Extension Tube 1.8m (72in)
4.76 kgs / 10.5 lbs

SH60AD
12/16/16K Adapter Stl 152mm (6in)
0.27 kgs / 0.6 lbs

SHSPU
16K Extension Support U Pin
0.36 kgs / 0.8 lbs

SJRC
Screw Jack Retaining Clip
0.18 kgs / 0.4 lbs

HDPR1/8
R Pin 1/8in
0.001 kgs / 0.002lbs

CL16LG48
16K Leg Clamp 48mm Swivel c/w T-Bolts
2.58 kgs / 5.7 lbs

This information is subject to change. Latest information may be obtained from JASCO's web site at www.hi-lite-systems.com. Copyright © 2008 by JASCO Sales Inc. All rights reserved. No part of this manual may be used or reproduced in any manner whatsoever without prior written permission.

16K ACCESSORIES - PARTS

SJ48CB
48mm (1.9”) Screw Jack
c/w Cap / BP
6.67 kgs / 14.7 lbs

SJ48CBT
48mm (1.9”) Screw Jack
c/w Cap / BP / T-Bolts
7.0 kgs / 15.43 lbs

SJ48S
48mm (1.9”) Screw Jack
Shaft c/w Nut
5.58 kgs / 12.3 lbs

SJ48U
48mm (1.9”) Screw Jack
c/w U Head
8.21 kgs / 18.1 lbs

SJ48N
48mm (1.9) SJ Nut
1.0 kgs / 2.2 lbs

SJ48BP
48mm SJ Base Plate
1.81 kgs / 4.0 lbs

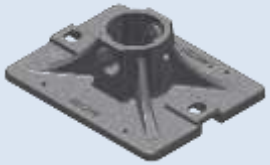

SJ48SCGRA
48mm (1.9) SJ Stabilizer
Cap Grey
0.14 kgs / 0.3 lbs

SJ48TP
48mm (1.9”) SJ Taper Pin
0.09 kgs / 0.2 lbs

HDCTP5/16X3-1/2
COTTER PIN 5/16X3-1/2
0.04 kgs / 0.09 lbs

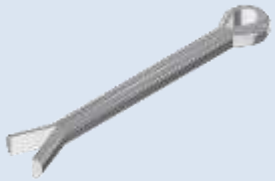

This information is subject to change. Latest information may be obtained from JASCO’s web site at www.hi-lite-systems.com. Copyright © 2008 by JASCO Sales Inc. All rights reserved. No part of this manual may be used or reproduced in any manner whatsoever without prior written permission.

16K ACCESSORIES - PARTS

SJ48TF
48mm (1.9») Screw Jack c/w Taper Pin Base Plate
7.9 kgs / 17.4 lbs

SJ48TS
48mm (1.9”) Screw Jack c/w Taper pin Swivel BP
8.2 kgs / 18.1 lbs

SJ48TPAD
48mm to 60mm Tapper Pin Adapter
0.6 kgs / 1.42 lbs

SJ60BPSW
60mm SJ BP Swivel
1.85 kgs / 4.08 lbs

SJ60BPFX
60mm SJ BP Fixed
2.64 kgs / 5.82 lbs

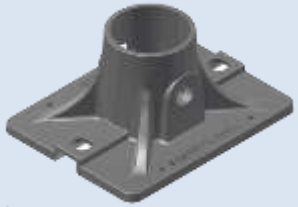

SJ48XH
SJ X Head 254x127mm (10x5”)
4.22 kgs / 9.3 lbs

SJUH108
Screw Jack U Head 10x8in Heavy Duty
6.8 kgs / 15 lbs

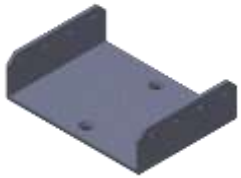

SJUH88
Screw Jack U Head 8x8in
5.4 kgs / 12 lbs

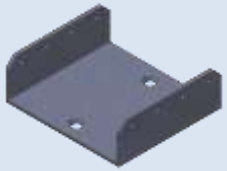

SJUH58
Screw Jack U Head 5x8in
2.27 kgs / 5 lbs

SJUH58S
Screw Jack U Head 5x8in c/w 48mm (1.9”) ID Spigot
3.63 kgs / 8.0 lbs

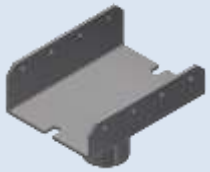

This information is subject to change. Latest information may be obtained from JASCO’s web site at www.hi-lite-systems.com. Copyright © 2008 by JASCO Sales Inc. All rights reserved. No part of this manual may be used or reproduced in any manner whatsoever without prior written permission.

16K ACCESSORIES - PARTS

BMALCLPC
Alum Beam Clip c/w Hi-Lite T-Bolt
0.14 kgs / 0.3 lbs

CL4848SS
48x48mm (1.9x1.9) Swivel Stl (Wedge Type)
1.7 kgs / 3.8 lbs

SH165SB4
16K Saddle Beam
165 mm 1.2 m (4')
8.0 kgs / 17.64 lbs

SH165SB5
16K Saddle Beam
165 mm 1.5 m (5')
9.7 kgs / 21.38 lbs

SH165SB6
16K Saddle Beam
165 mm 1.8 m (6')
11.3 kgs / 24.91 lbs

HDTB1/2X1-3/4C
T-Bolt c/w Hex Nut Crp.
1/2x1-3/4in
0.1 kgs / 0.22 lbs

HDJLC
Jet Lock c/w 2 Jam Nuts
0.1kgs / 0.22lbs

This information is subject to change. Latest information may be obtained from JASCO's web site at www.hi-lite-systems.com. Copyright © 2008 by JASCO Sales Inc. All rights reserved. No part of this manual may be used or reproduced in any manner whatsoever without prior written permission.

Sales and Manufacturing Facilities

HI-LITE SYSTEMS / JASCO SALES INC
Mississauga, Ontario, Canada
+1-905-677-4032

TARGET HI-LITE
Abu Dhabi, United Arab Emirates
+971-2-6727452

SHOR-SCAF USA INC.
Las Vegas, Nevada, U.S.A.

HI-LITE CHINA
Tianjin, China

HI-LITE INDIA
Chennai, India

Supported by five regional offices.

Hi-Lite products are utilized by contractors in over thirty countries around the world.

Experience

the Hi-Lite Advantage.

Experience the Hi-Lite Advantage.

Call 1-877-HILITE-1 (1-877-445-4831) to request a demonstration of our Hi-Lite Aluminum Systems.

Hi-Lite Systems International Inc.
1680 Bonhill Road
Mississauga, Ontario
Canada L5T 1C8

Tel: 1-905-677-4032
Toll-free: 1-877-HILITE-1 [North America] (1-877-445-4831)
Fax: 1-905-677-4542
Web Site: www.hi-lite-systems.com
E-mail: hilite@hi-lite-systems.com

HI-LITE
ALUMINUM CONCRETE SUPPORT SYSTEMS